REVISION					
ZONE	REV	DESCRIPTION	DATE	CHANGED BY	APPROVED
	E	ECO-14612	5/30/2025	DMAY	REVANGELISTI

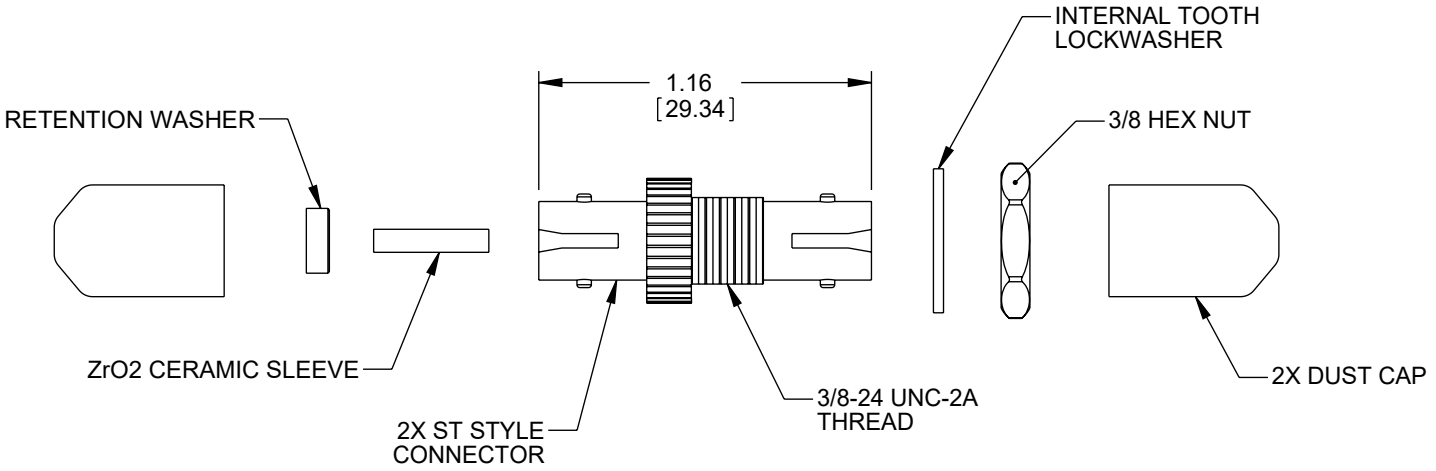

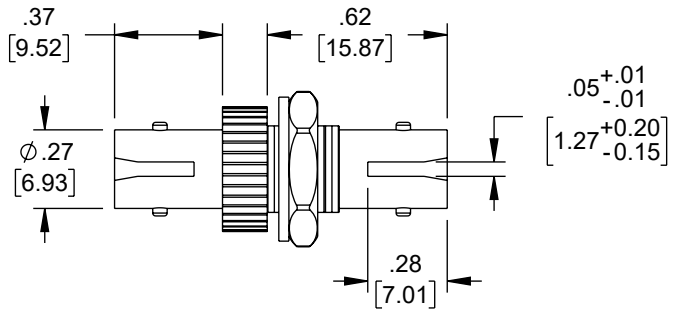

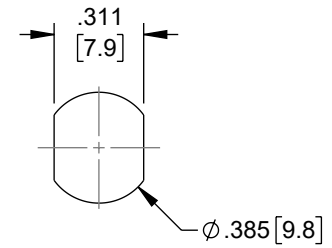

RECOMMENDED
PANEL HOLE

NOTES:
1. INSERTION LOSS: 0.20dB MAX
2. DURABILITY (500 MATINGS): 0.20dB MAX
3. RETENTION FORCE: 200~600 GRAMS
4. OPERATING TEMPERATURE: -40°C ~ +75°C
5. COUPLER BODY AND HARDWARE, NICKEL PLATED
6. MAXIMUM PANEL THICKNESS: 0.140"

UNLESS OTHERWISE SPECIFIED
LEADING DIMENSIONS ARE INCHES
DIMENSIONS IN [ ] ARE MILLIMETERS

TOLERANCES:

.X = ±.2 [5]	FRACTIONS
.XX = ±.02 [0.5]	± 1/32
.XXX = ±.005 [0.13]	ANGLES ± 1°

CABLE LENGTH TOLERANCES:
≤12 [305] = +1 [25] / -0
>12 [305] ≤ 60 [1524] = +2 [51] / -0
>60 [1524] ≤ 120 [3048] = +4 [102] / -0
>120 [3048] ≤ 300 [7620] = +6 [152] / -0
>300 [7620] = +5% / -0

ALL DIMENSIONS ARE FOR REFERENCE ONLY AND SUBJECT TO CHANGE WITHOUT NOTICE.
UN-DIMENSIONED/NON-CRITICAL FEATURES MAY VARY IN SIZE AND LOCATION
COLORS MAY VARY

L-com®
an INFINITE brand
Website: www.L-com.com
Phone: 1.800.341.5266 | 1.978.682.6936

INTERPRET ALL DIMENSIONS AND TOLERANCES PER ASME Y14.5

SCALE	SHEET
NONE	1 OF 1

DESCRIPTION
ADPTRST-ST SMPLX CERAMIC

SIZE	CAGE CODE	DRAWN BY	ITEM NO.	REV
A	43321	C.MCCORMICK	FOA-001	E

THE INFORMATION CONTAINED IN THIS DRAWING IS THE SOLE PROPERTY OF INFINITE ELECTRONICS, INC. ANY REPRODUCTION IN PART OR WHOLE WITHOUT THE WRITTEN PERMISSION OF INFINITE ELECTRONICS, INC. IS PROHIBITED. THESE COMMODITIES, TECHNOLOGY OR SOFTWARE WERE EXPORTED FROM THE UNITED STATES IN ACCORDANCE WITH THE EXPORT ADMINISTRATION REGULATIONS. DIVERSION CONTRARY TO U.S. LAW PROHIBITED.