Actuator

Series for Safety switches (SLK, SLM, ENK-VTU, ENM2-VTW)

Description **BETÄTIGER A1 KPL.**	Article number **3911702228**

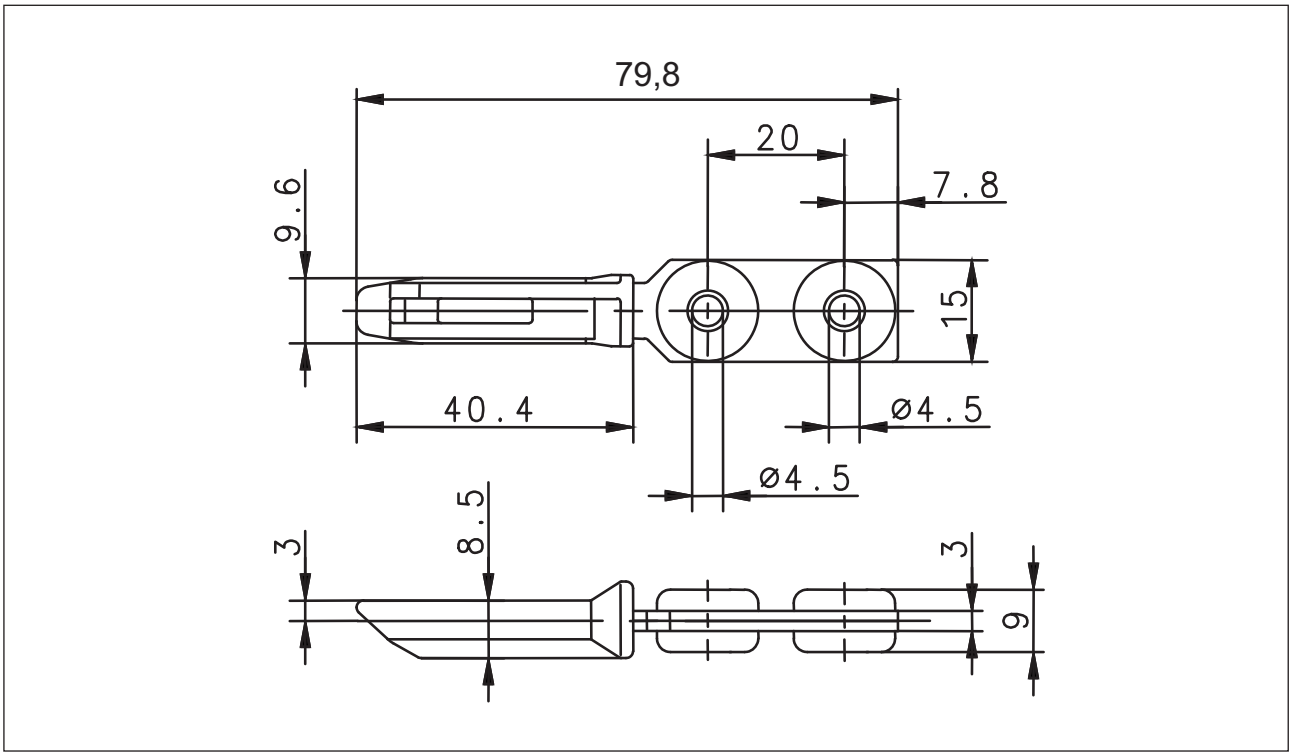

Mechanical data		
Actuator		Steel/PA
Minimum actuating radius	R_{min}	400 mm