Linear actuator CAT 33, 33H and 32B

Installation instructions



WARNING!
Read all of the installation instructions in this manual before attempting to install the actuator.

Contents

1 Important safety information 4

2 Intended use 4
2.1 Duty Factors. 5
2.2 Requirements for correct installation: 6

3 Available versions 6

4 Optional equipment 6

5 Technical data 6

6 Installation 8

7 Wiring Diagrams 10

8 Encoder E2 11

9 Maintenance 13

1 Important safety information

The actuator is assembled and delivered by SKF according to the ordering key. Modification of the actuator is not allowed in any way. Any modification made will void the warranty and could create a safety hazard. SKF disclaims any and all liability or responsibility for the modified product and for any claims, demands or causes of action for damage or for personal injury resulting from modification and/or use of such product.

In addition, if the actuator has been disassembled, misused, or altered without prior written authorisation, warranty will be voided.

These installation instructions are part of the actuator and should be kept together with all relevant documentation regarding the application in which it is used.

The following are **important safety precautions** that must be followed during installation:

- All electrical installation and maintenance should be carried out by qualified personnel.
- Terminate power supply to the actuator before installation or maintenance.
- Use the appropriate safety equipment when installing/repairing the equipment.
- When connecting the actuator, make sure that the power supply corresponds to what is required in the technical specifications. See section 5.

2 Intended use

The actuator is designed to be used only in the following situations:

- Axial loads.
- Indoor applications.
- Ambient temperature range of –20 to +50 °C (*–5 to +120 °F*).
- Intermittent use.

Actuators in the following motor ranges may only be used in an industrial environment.

- D12xxx
- D24xxx

This actuators are compliant with the emission requirements of the EMC Generic standards EN 61000-6-4, Emission for industrial environments. The user maybe required to take adequate measures with respect to emissions, if the product is operated in residential, commercial and light-industrial environments according to EMC Generic standards EN-61000-6-3.



CAT 32B

2.1 Duty Factors

Table #

DC versions only

Actuator	Duty factor at max dynamic load and at 20 °C
CAT 33	15%
CAT 32B	20%
CAT 33H	20%

AC versions only:

CAT 33, 120 V AC

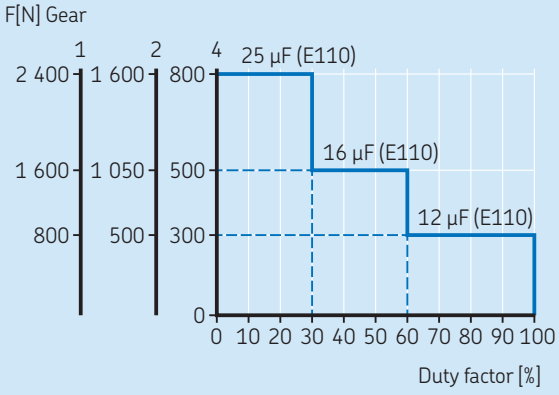

CAT 33, 230 V AC

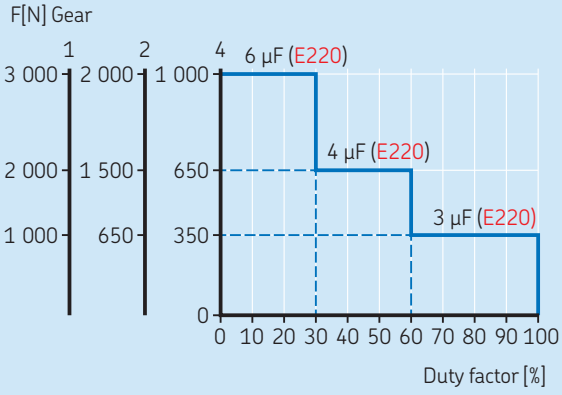

CAT 32B, 230/120 V AC

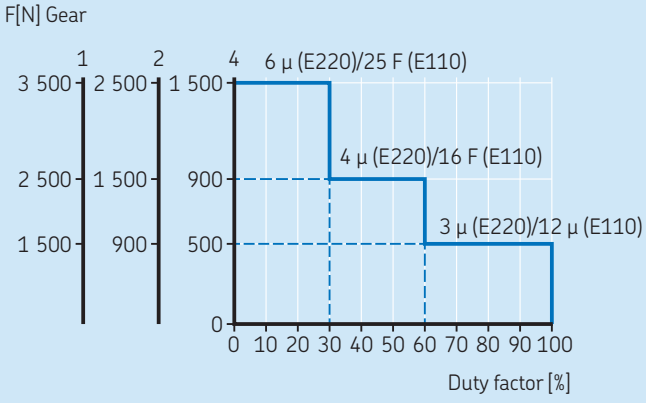

CAT 33H, 120 V AC

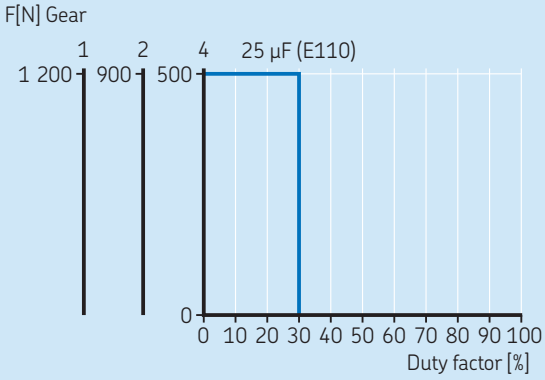

CAT 33H, 230 V AC

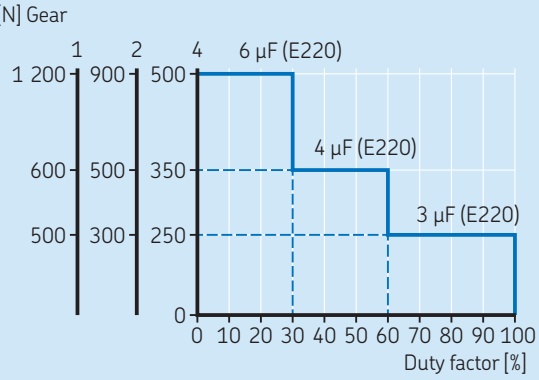

2.2 Requirements for correct installation:

- Maximum angle between the actuator's attachment and the rear mounting attachment must not exceed 30°. See **fig 1**.
- The surface to which the actuator is attached must be able to withstand the force applied by the actuator.
- Ensure that the applied force on the attachments is always centered on the actuator. See **fig 2**.
- If the actuator is ordered without a motor, to avoid damage to the actuator, make sure that maximum dynamic torque applied on the worm screw (supplied with actuator) does not exceed 0,3 Nm.
- **IMPORTANT:** Avoid running the actuator into the mechanical end position. Repeatedly running into the mechanical end position may damage the actuator or shorten its lifespan.

WARNING!
Do not exceed the actuator's load limits. Doing so can result in serious injury and/or property damage. For technical data on load limits, see section 5 below.

Fig. 1

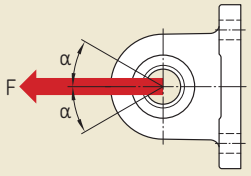

Angle α = max 30°

Fig. 2

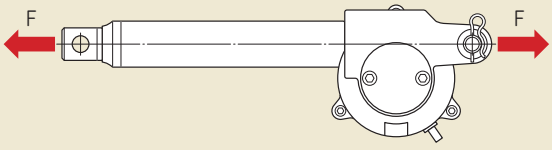

3 Available versions

CAT 32B, 33 and 33H are available in the following versions:

- 12/24 V DC
- 120/230/400 V AC
- Five types of front attachments and four types of rear attachments.
- Encoder for digital feedback signal.

4 Optional equipment

- Control units
- Limit switches
- Encoder E2 (see section 8)

More information is available on skf.com

5 Technical data

All values for standard actuators are tested under the following conditions:

- Temperature +20 °C *(68 °F)*
- Stabilized voltage
- Compression load



CAT 33H

Technical data CAT 33, AC

		Unit	CAT 33
Rated push load		N	800 to 3 000
Rated pull load		N	800 to 3 000
Speed (at full load)		mm/s	5 to 24[1]
Stroke		mm	100 to 400
Retracted length		mm	S+150/158/189[2]
Voltage		V AC	120, 230. 400
Power consumption	120 V AC	W	98 (brake 133,2 W)
	230 V AC	W	92 (brake 117,3 W)
	400 V AC	W	80
Current consumption	120 V AC	A	0,82 (brake +0,29 A)
	230 V AC	A	0,4 (brake +0,11 A)
	400 V AC	A	0,2
Duty cycle		%	30
Ambient temperature		°C	–20 to +50
Type of protection		IP	20/54/55
Weight		kg	2 to 2,7

[1] Depending on selected motor.
[2] Dimension depends on selected front attachment.

Technical data CAT 33, DC

		Unit	CAT 33
Rated push load		N	800 to 3 000
Rated pull load		N	800 to 3 000
Speed (at full load)		mm/s	5 to 52[1]
Stroke		mm	100 to 400
Retracted length		mm	S+150/158/189[2]
Voltage		V DC	12 or 24
Power consumption		W	N/A
Current consumption	12 V DC	A	18
	24 V DC	A	9
	24 V DC	A	5 (for motors C24CW and D24CW)
Duty cycle		%	15
Ambient temperature		°C	–20 to +50
Type of protection		IP	20/44/65
Weight		kg	2 to 2,7

[1] Depending on selected motor.
[2] Dimension depends on selected front attachment.

Technical data CAT 32B, AC

		Unit	CAT 32B
Rated push load		N	1 500 to 3 500
Rated pull load		N	1 500 to 3 500
Speed (at full load)		mm/s	6,5 to 32[1]
Stroke		mm	50 to 700
Retracted length		mm	S+167/175/206[2]
Voltage		V AC	120, 230. 400
Power consumption	120 V AC	W	98 (brake 133,2 W)
	230 V AC	W	92 (brake 117,3 W)
	400 V AC	W	80
Current consumption	120 V AC	A	0,82 (brake +0,29 A)
	230 V AC	A	0,4 (brake +0,11 A)
	400 V AC	A	0,2
Duty cycle		%	30
Ambient temperature		°C	–20 to +50
Type of protection		IP	20/54/55
Weight		kg	2 to 3,5

[1] Depending on selected motor.
[2] Dimension depends on selected front attachment.

Technical data CAT 32B, DC

		Unit	CAT 32B
Rated push load		N	1 000 to 4 000
Rated pull load		N	1 000 to 4 000
Speed (at full load)		mm/s	5 to 52[1]
Stroke		mm	50 to 700
Retracted length		mm	S+167/175/206[2]
Voltage		V DC	12 or 24
Power consumption		W	N/A
Current consumption	12 V DC	A	18
	24 V DC	A	9
	24 V DC	A	5 (for motors C24CW and D24CW)
Duty cycle		%	20
Ambient temperature		°C	–20 to +50
Type of protection		IP	20/44/65
Weight		kg	2 to 3,5

[1] Depending on selected motor.
[2] Dimension depends on selected front attachment.

Technical data CAT 33H, AC

		Unit	CAT 33H
Rated push load		N	500 to 1 200
Rated pull load		N	500 to 1 200
Speed (at full load)		mm/s	20 to 90[1]
Stroke		mm	100 to 400
Retracted length		mm	S+150/158/189[2]
Voltage		V AC	120, 230. 400
Power consumption	120 V AC	W	98 (brake 133,2 W)
	230 V AC	W	92 (brake 117,3 W)
	400 V AC	W	80
Current consumption	120 V AC	A	0,82 (brake +0,29 A)
	230 V AC	A	0,4 (brake +0,11 A)
	400 V AC	A	0,2
Duty cycle		%	30
Ambient temperature		°C	–20 to +50
Type of protection		IP	20/54/55
Weight		kg	2 to 2,7

[1] Depending on selected motor.
[2] Dimension depends on selected front attachment.

Technical data CAT 33H, DC

		Unit	CAT 33H
Rated push load		N	400 to 1 200
Rated pull load		N	400 to 1 200
Speed (at full load)		mm/s	17 to 193[1]
Stroke		mm	100 to 400
Retracted length		mm	S+150/158/189[2]
Voltage		V DC	12 or 24
Power consumption		W	N/A
Current consumption	12 V DC	A	18
	24 V DC	A	9
	24 V DC	A	5 (for motors C24CW and D24CW)
Duty cycle		%	20
Ambient temperature		°C	–20 to +50
Type of protection		IP	20/44/65
Weight		kg	2 to 2,7

[1] Depending on selected motor.
[2] Dimension depends on selected front attachment.

6 Installation

Only qualified personnel are allowed to install this equipment. Contact SKF for further information.

WARNING!
Do not exceed the actuator's load limits. Doing so can result in serious injury and/or property damage. For technical data on load limits, see section 5, **page 5**.

Fig. 3

Actuator assembly

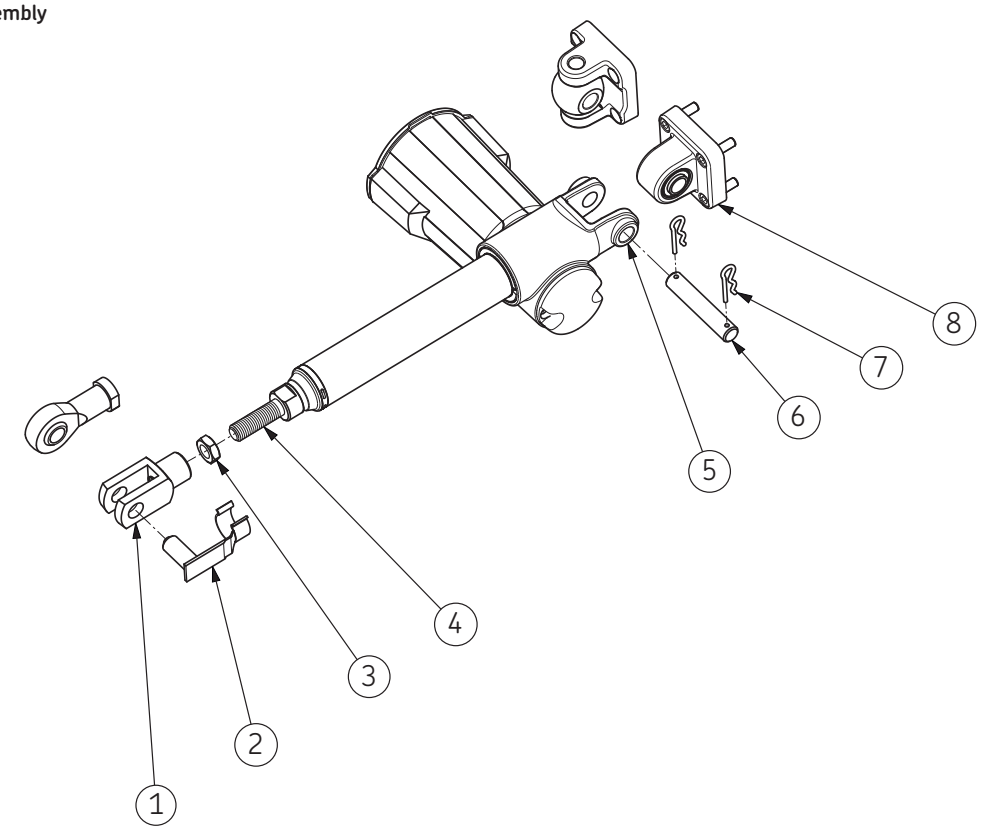

Description of the mechanical installation procedure.

1 Screw counter nut (**3**) onto the actuator front attachment (**4**)
2 Screw the front attachment (**1**, **2**) onto the actuator's front attachment (**4**), making sure that the engaged thread length is, at a minimum, the diameter of the thread which is 12 mm.
3 Tighten the counter nut (**3**) onto the front attachment (**1**) with 20 Nm.
5 Disassemble pin (**2**) from front attachment (**1**).
6 Install the actuator onto the front and rear attachments. Mount the pin (**2**) onto the front attachment (**1**). Mount rod (**7**) with safety pins (**6**) onto the rear attachments (**5**) and (**8**).

Fig. 4

Overview of front and rear attachment options

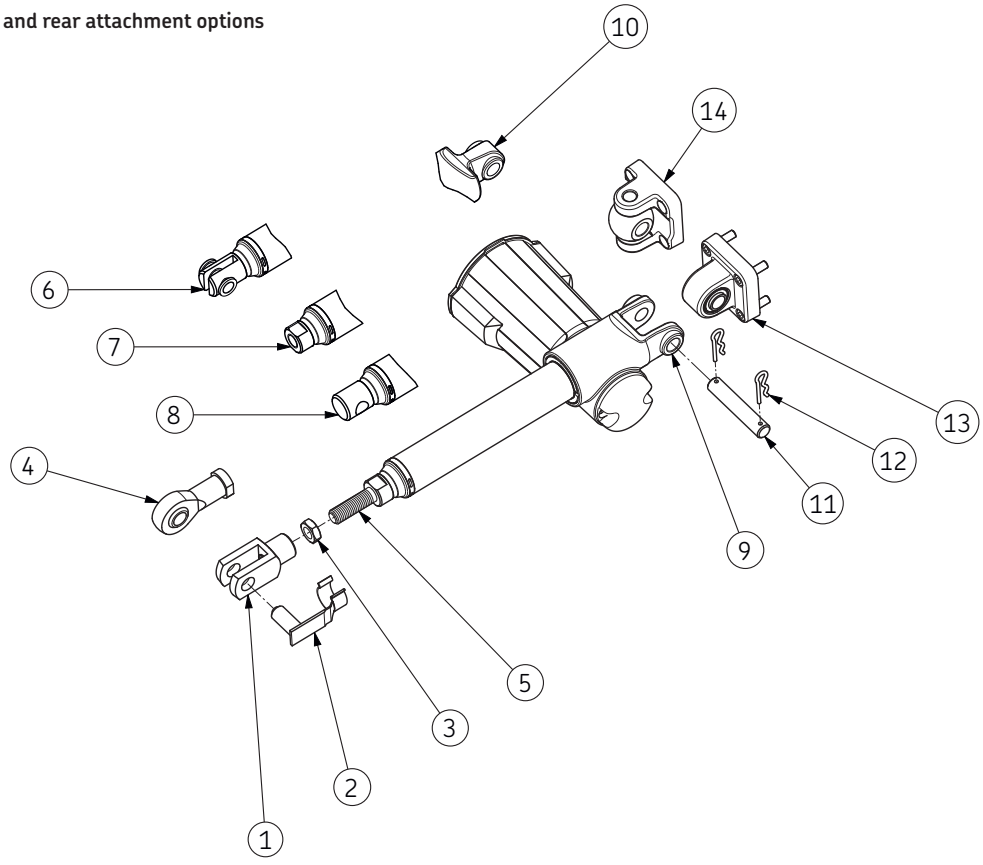

1 Front attachment (accessories) 576-32
2 Safety pin (part of 576-32)
3 Nut M12
4 Front attachment (accessories) 575-32
5 Actuator front attachment option G3
6 Actuator front attachment option G5
7 Actuator front attachment option G4
8 Actuator front attachment option G1/G2
9 Actuator rear attachment A1/A2
10 Actuator rear attachment K1/K2
11 Mounting rod (supplied with rear attachment A1/A2)
12 Safety pin (supplied with rear attachment A1/A2)
13 Attachment rear (accessories) 580-32
14 Attachment rear (accessories) 582-32

7 Wiring Diagrams

WARNING!

All electrical installation/maintenance should be carried out by qualified personnel.

- Isolate the power before installation or maintenance. Use the appropriate safety equipment when installing/repairing the equipment.
- When connecting this equipment to the electrical supply, make sure that it corresponds to the one stated in the technical specifications.
- For complete installation instructions regarding SKF limit switches,, see separate installation instructions.

Connecting diagram

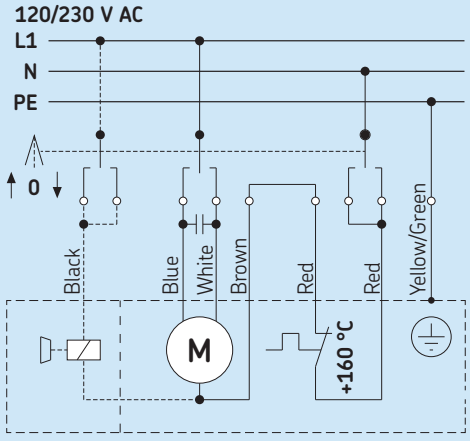

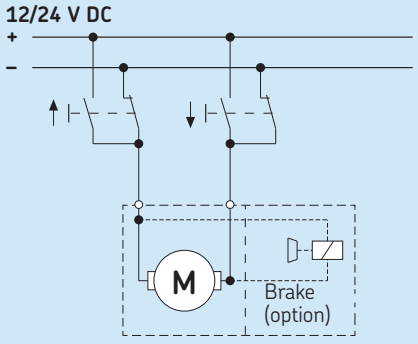

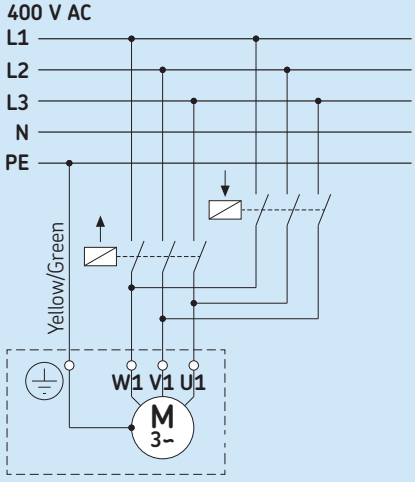

8 Encoder E2

Two-channel quadrature encoder for CATR/L 32 and 33

- The encoder is available for all motor types and screw pitches in the CAT-modular range
- The encoder consists of two parts; one rotating magnet on the outgoing motor shaft, and one circuit board (PCB) assembled on the motor's opposite side.
- The rotating permanent magnet has four poles (2N and 2S) and during one motor revolution, two pulses are generated in each channel.
- The output signals, channel 1 and 2, are phase-shifted ±90°
- Supply voltage range is from 5 to 24 V DC
- Temperature range is from –20 to +50 °C

Technical information

Fig. 4

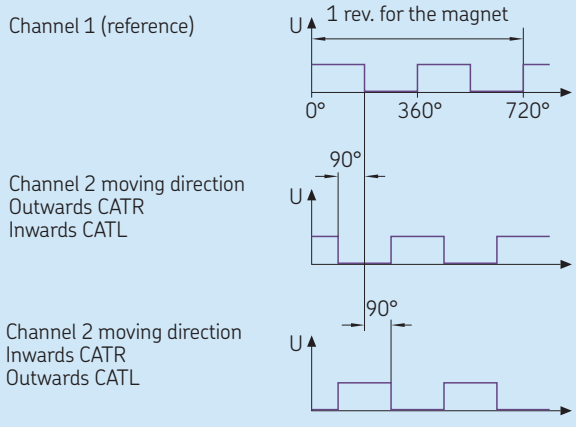

(**1**) Output signals when the actuator is moving either outwards or inwards.

Movement resolution

Actuator	Gear option	Pulse at 1 mm stroke	Resolution per pulse [mm]
CAT 33	1	16,67	0,06
CAT 33	2	8,33	0,12
CAT 33	4	4,17	0,24
CAT 33H	1	4,00	0,25
CAT 33H	2	2,00	0,50
CAT 33H	4	1,00	1,00
CAT 32B	1	12,50	0,08
CAT 32B	2	6,25	0,16
CAT 32B	4	3,13	0,32

Recommended operating ratings

Parameter	Value
Temperature range	–20 to +50 °C
Supply voltage range	+5 to +24 V DC ±5%
Current sink capability	Max 20 mA

Wire color coding (colors according to DIN 47100)

Wire color	Function
Brown	Supply voltage GND (-)
White	Supply voltage POS (+)
Green (L)[1] alt. Yellow (R)[1]	Output signal channel 1
Yellow (R)[1] alt. Green (L)[1]	Output signal channel 2

[1] The alternatives in wire color for output signals channel 1 and 2 mean that the actuator has been assembled as CATR (right) or CATL (left). The wire is delivered with stripped ends (no connector).

Output signal interface

The output interface of the encoder (identical for both channels) is of type NPN open collector with a 1,8 kΩ pull-up resistor. See **figure 5**. In case the application requires higher sourcing current than what is provided by the encoder, an external optional pull-up resistor could be inserted as shown in **figure 5**. Note that the encoder maximum current sink capability (see **table 2**) must never be exceeded.

Fig. 5

Encoder output circuitry – open drain with pull-up

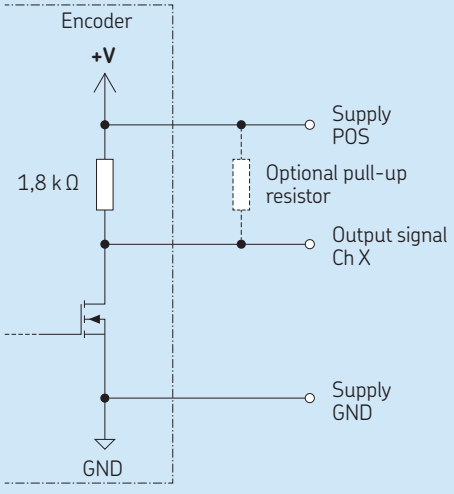

9 Maintenance

Interval	Maintenance work
Daily	• Check actuator for visible damage • Clean off dust and dirt if necessary
Monthly	• Check attachments and tighten if necessary. • Check that cables are not damaged, replace if necessary. • Check optional equipment for visible damage, replace if necessary. • Functional check of operation
Every 6 months	• A few drops of oil should be applied to the adjustment tube
Annually	• Check labels • Check electrical connections

Keep this information for future reference. Please contact your local SKF sales office if you need more information or spare parts.

Please check **www.skf.com** for relevant addresses.

® SKF is a registered trademark of the SKF Group.

© SKF Group 2017
The contents of this publication are the copyright of the publisher and may not be reproduced (even extracts) unless prior written permission is granted. Every care has been taken to ensure the accuracy of the information contained in this publication but no liability can be accepted for any loss or damage whether direct, indirect or consequential arising out of the use of the information contained herein.

PUB MT/I1 15511/1 EN · July 2017

Certain image(s) used under license from Shutterstock.com

