Q45 NAMUR Sensors

Datasheet



- Intrinsically safe sensors with the rugged design and exceptional optical performance of Q45 series sensors
- Use with approved switching amplifiers that have intrinsically safe input circuits
- Output passes ≤ 1.2 mA in the “dark” condition and ≥ 2.1 mA in the “light” condition
- Internal multi-turn SENSITIVITY (Gain) control accessible beneath hinged, o-ring sealed top cover
- Models are available with an integral cable or a quick-disconnect connector
- Supply voltage: 5 to 15 V dc

WARNING: Not To Be Used for Personnel Protection

Never use this device as a sensing device for personnel protection. Doing so could lead to serious injury or death. This device does not include the self-checking redundant circuitry necessary to allow its use in personnel safety applications. A sensor failure or malfunction can cause either an energized or de-energized sensor output condition.

Standard 2 m (6.5 ft) cable models are listed. To order the 9 m (30 ft) cable model, add suffix "W/30" to the cabled model number (Q459E W/30). Models with a QD connector require a mating cable (see Accessories list).

Opposed Models - Emitter (E) and Receiver (R)

Models	Cable	Performance	Output Type
Q459E	2 m (6.5 ft)	880 nm, infrared Range: 6meters (20 feet)	Constant current ≤1.2 mA dark ≥2.1 mA light
Q459EQ	4-Pin Euro QD		
Q45AD9R	2 m (6.5 ft)		
Q45AD9RQ	4-Pin Euro QD		

Retroreflective Models

Retroreflective range is specified using one model BRT-3 P retroreflector (3-inch diameter). Actual sensing range may be more or less than specified, depending upon the efficiency and reflective area of the retroreflector(s) in use.

Non-Polarized Models	Cable	Performance	Output Type
Q45AD9LV	2 m (6.5 ft)	680 nm, visible red Range: 9 m (30 ft)	Constant Current ≤1.2 mA dark ≥2.1 mA light
Q45AD9LVQ	4-pin Euro QD		

Polarized Models	Cable	Performance	Output Type
Q45AD9LP	2 m (6.5 ft)	680 nm, visible red Range: 6 m (20 ft)	Constant Current ≤1.2 mA dark ≥2.1 mA light
Q45AD9LPQ	4-pin Euro QD		

Diffuse Models

Performance curves are based on a 90% reflectance white test card.

Short Range Models	Cable	Performance	Output Type
Q45AD9D	2 m (6.5 ft)	880 nm, infrared Range: 300 mm (12 in)	Constant Current ≤1.2 mA dark ≥2.1 mA light
Q45AD9DQ	4-pin Euro QD		

Long Range Models	Cable	Performance	Output Type
Q45AD9DL	2 m (6.5 ft)	880 nm, infrared Range: 1 m (40 in)	Constant Current ≤1.2 mA dark ≥2.1 mA light
Q45AD9DLQ	4-pin Euro QD		

Convergent Models

Convergent mode models operate at 680 nm, visible red. Performance curves are based on a 90% reflectance white test card.

Models	Cable	Focus	Output Type
Q45AD9CV	2 m (6.5 ft)	38 mm (1.5 in) Spot size at focus: 1.3 mm (0.05 in)	Constant Current ≤1.2 mA dark ≥2.1 mA light
Q45AD9CVQ	4-pin Euro QD		
Q45AD9CV4	2 m (6.5 ft)	100 mm (4 in) Spot size at focus: 1.5 mm (0.06 in)	Constant Current ≤1.2 mA dark ≥2.1 mA light
Q45AD9CV4Q	4-pin Euro QD		

Plastic Fiber Optic Models

Performance curves are based on a 90% reflectance white test card.

Models	Cable	Performance	Output Type
Q45AD9FP	2 m (6.5 ft)	660 nm, visible red Range: varies by sensing mode and fiber optics used	Constant Current ≤1.2 mA dark ≥2.1 mA light
Q45AD9FPQ	4-pin Euro QD		

Glass Fiber Optic Models

Performance curves are based on a 90% reflectance white test card.

Models	Cable	Performance	Output Type
Q45AD9F	2 m (6.5 ft)	880 nm, infrared Range: varies by sensing mode and fiber optics used	Constant Current ≤1.2 mA dark ≥2.1 mA light
Q45AD9FQ	4-pin Euro QD		

Models	Cable	Performance	Output Type
Q45AD9FV	2 m (6.5 ft)	650 nm, visible red Range: varies by sensing mode and fiber optics used	Constant Current ≤1.2 mA dark ≥2.1 mA light
Q45AD9FVQ	4-pin Euro QD		

Wiring Connections

NAMUR Sensors with Attached Cable

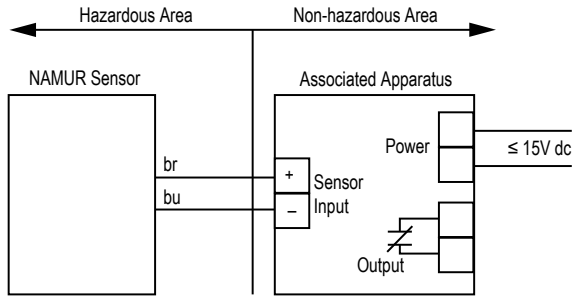

NAMUR Sensors with Quick-Disconnect

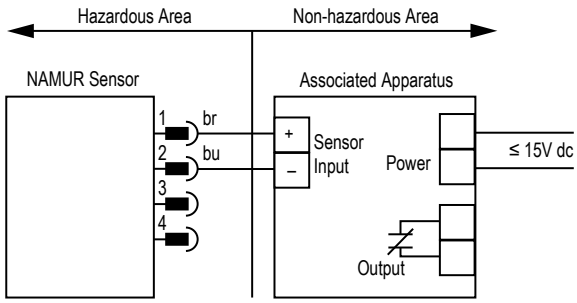

Entity Parameters		HAZARDOUS AREA APPLICATION
Associated Apparatus	Sensor Apparatus	
Voc ≤ 15V dc	Vmax = 15V dc	“Associated apparatus” may include intrinsically safe amplifiers and barriers to monitor sensor supply current, which is the sensor’s output signal. Associated apparatus must limit both supply voltage and supply current in the event of failure.
Isc ≤ 60 mA	Imax = 60 mA	
Ca ≤ *C (cable) + Ci	Ci = 0.3 µF	
La ≤ *L (cable) + Li	Li = 0	
	Pi = 225 mW	
*C(cable) = 60 pF/ft	*L(cable) = 0.2 µH/ft	

4-pin Euro-style Pinout (Cable Connector Shown)	No.	Wire Color
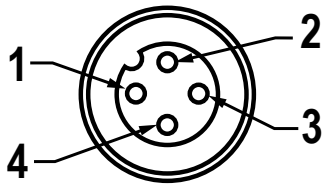	1	Brown
	2	Blue
	3	N/A
	4	N/A

Specifications for Q45 NAMUR Sensors

Supply Voltage and Current
5 to 15 V dc. Supply voltage is provided by the amplifier to which the sensor is connected.

Adjustments
Multi-turn sensitivity control on top of sensor, beneath a transparent o-ring sealed cover, allows precise sensitivity setting (turn clockwise to increase gain).

Indicators
Indicator LEDs are highly visible, located beneath a raised transparent dome on top of the sensor.
POWER (red) LED (emitters only) lights whenever 5 to 15 V dc power is applied
SIGNAL (red) LED lights whenever the sensor sees its modulated light source

Construction
Molded thermoplastic polyester housing, o-ring sealed transparent Lexan® top cover, molded acrylic lenses, and stainless steel hardware. Q45s are designed to withstand 1200 psi washdown. The base of cabled models has a 1/2-inch NPS integral internal conduit thread. [1]

Output
Constant current output: ≤ 1.2 mA in the “dark” condition and ≥ 2.1 mA in the “light” condition

Output Response Time
Opposed mode receiver: 2 milliseconds on/0.4 milliseconds off. All others 5 milliseconds on/off (does not include amplifier response)

Environmental Rating
Banner tested to NEMA 6P, IEC IP67

Operating Conditions
Temperature: −40 °C to +70 °C (−40 °F to +158 °F)
Maximum relative humidity: 90% at 50 °C (non-condensing)

Connections
PVC-jacketed 2 m (6.5 ft) or 9 m (30 ft) cables, or 4-pin Euro-style quick-disconnect (QD) fitting are available. QD cables are ordered separately. See *Accessories*.

Design Standards

Q45AD9 Series sensors comply with the following standards:

ATEX (European)	EN 60079-0, EN 60079-11, EN 60079-26
Canadian	CAN/CSA C22.2, No. 142-M1987, No.157-92, No. 1010.1, E60079-0, E60079-11
United States	FM Class 3600, 3610, and 3810, ANSI/ISA 61010-1 (82.02.01), ANSI/ISA 60079-0, 60079-11, and 60079-26
IECEx	IEC 60079-0, IEC 60079-11

Certifications

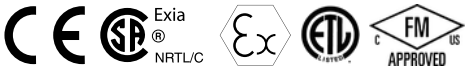

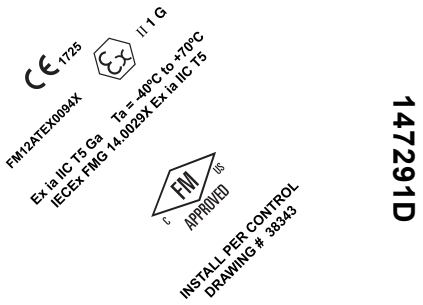

IECEx	Ex ia IIC T5 Ta= –40 °C to +70 °C - 38343 Entity; IECEx FMG 14.0029X Entity Parameters: V_{max}= 15 V dc, I_{max}= 60 mA, C_i=0.3 µf, L_i=0 mH

Approvals

ATEX (European)	II 1 G Ex ia IIC T5 Ga Ta = -40°C to 70°C - 38343 Entity; FM12ATEX094X Entity Parameters: V_{Max} = 15 V dc, I_{Max} = 60 mA, C_i = 0.3 µF, L_i = 0 mH

[1] Lexan® is a registered trademark of General Electric Co.

Canada	Intrinsically safe for Class I, II and III, Division 1, Groups A, B, C, D, E, F and G T5 Ta = -40°C to 70°C - 38343; Entity Non-incendive for Class I, Division 2, Groups A, B, C and D, T5 Ta = -40°C to 70°C Intrinsically safe for Class I, Zone 0 Ex ia Group IIC T5 Ta = -40°C to 70°C - 39616; Entity Entity Parameters: V_{Max} = 15 V dc, I_{Max} = 60 mA, C_i = 0.3 µF, L_i = 0 mH. a = Sensing mode D, DL, F, FP, FV, LV, LP, CV, CV4 or R. b = Connection method Q or blank.
United States	Intrinsically safe for Class I,II and III, Division 1, Groups A, B, C, D, E, F and G T5 Ta = -40°C to 70°C - 38343; Entity Non-incendive for Class I, Division 2, Groups A, B, C and D, T5 Ta = -40°C to 70°C Suitable for Class II and III, Division 2, Groups F and G*, T5 Ta = -40°C to 70°C Intrinsically safe for Class I, Zone 0 AEx ia Group IIC T5 Ga Ta = -40°C to 70°C; Entity *Class II and III, Division 2 applies only to model numbers ending in a Q suffix. Entity Parameters: V_{Max} = 15 V dc, I_{Max} = 60 mA, C_i = 0.3 µF, L_i = 0 mH. a = Sensing mode D, DL, F, FP, FV, LV, LP, CV, CV4 or R. b = Connection method Q or blank.

CAUTION: Electrostatic Discharge (ESD)

Special Conditions for Safe Use. Parts of the enclosure are non-conducting and may generate an ignition-capable level of ESD. Cleaning of the equipment shall be done only with a damp cloth.

Performance Curves

Opposed

Excess Gain

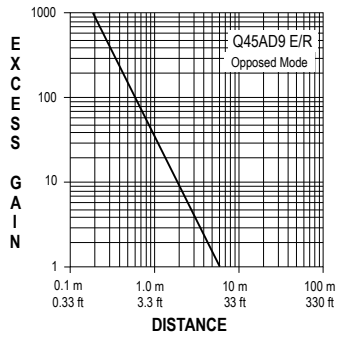

Beam Pattern

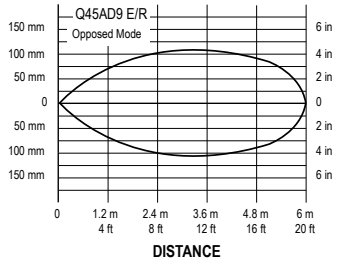

Retroreflective Non-Polarized

Excess Gain

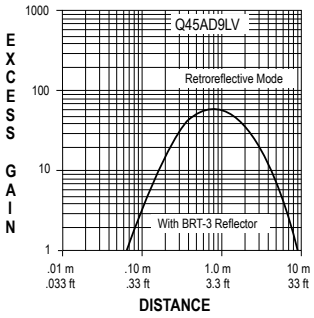

Beam Pattern

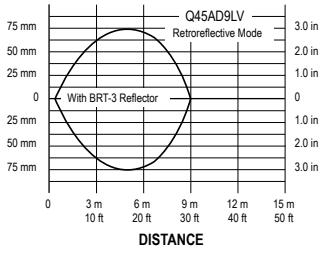

Retroreflective Polarized

Excess Gain

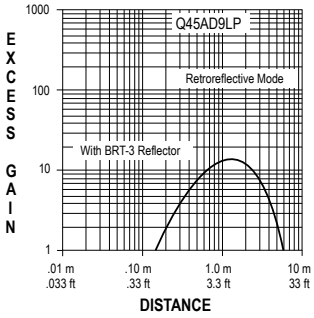

Beam Pattern

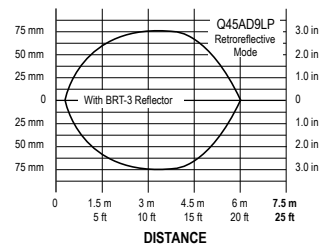

Diffuse Short Range

Excess Gain

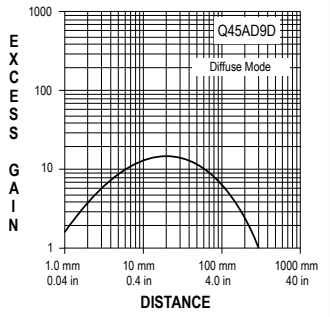

Beam Pattern

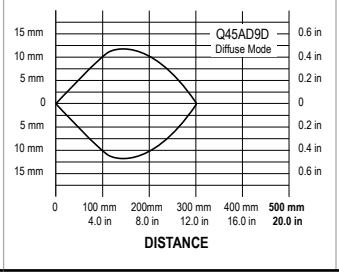

Diffuse Long Range

Excess Gain

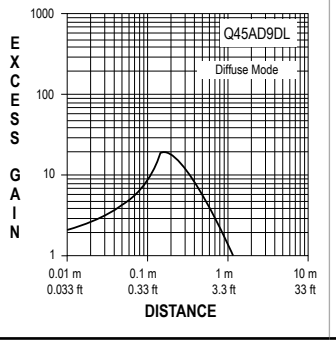

Beam Pattern

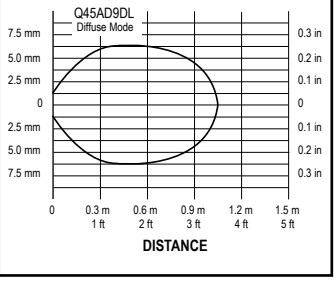

Convergent (CV and CVQ Models)

Excess Gain

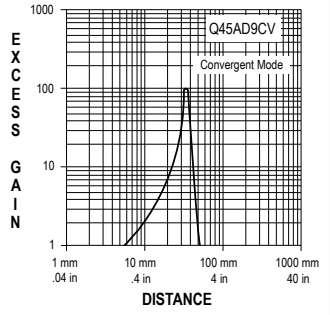

Beam Pattern

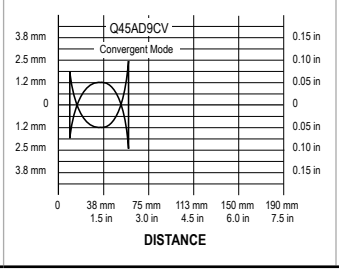

Convergent (CV4 and CV4Q Models)

Excess Gain

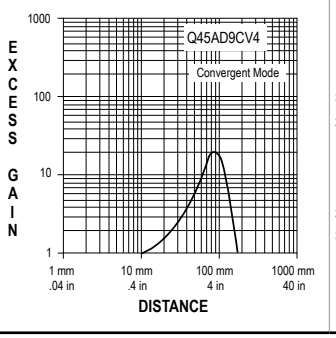

Beam Pattern

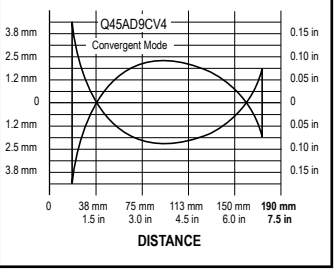

Plastic Fiber Optic (Opposed Mode)

Excess Gain

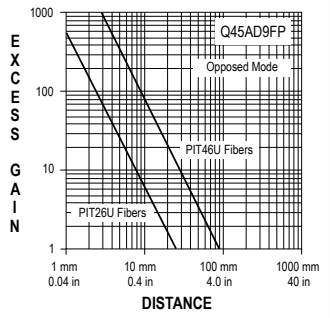

Beam Pattern

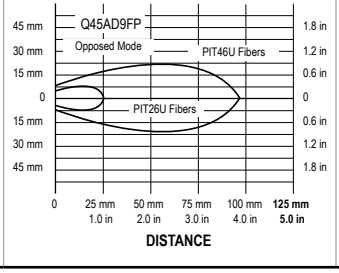

Plastic Fiber Optic (Diffuse Mode)

Excess Gain

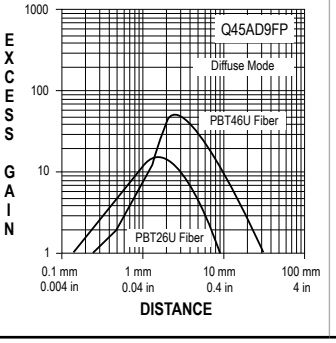

Beam Pattern

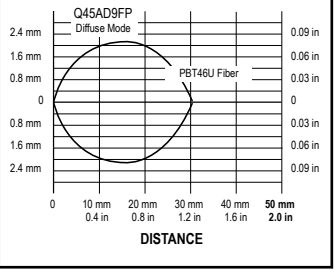

Glass Fiber Optic, Infrared (Opposed Mode)

Excess Gain

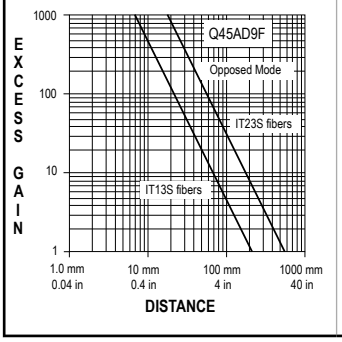

Beam Pattern

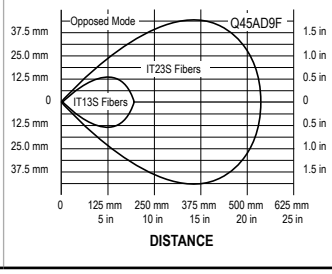

Glass Fiber Optic, Infrared (Diffuse Mode)

Excess Gain

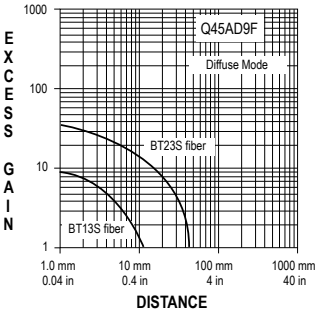

Beam Pattern

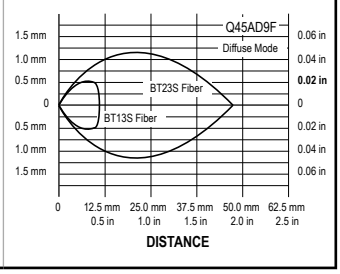

Glass Fiber Optic, Visible Red (Opposed Mode)

Excess Gain

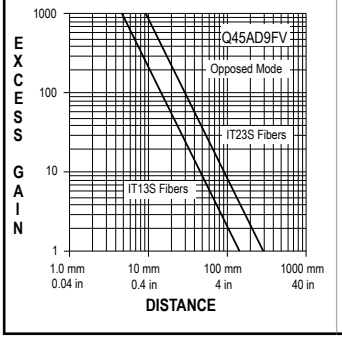

Beam Pattern

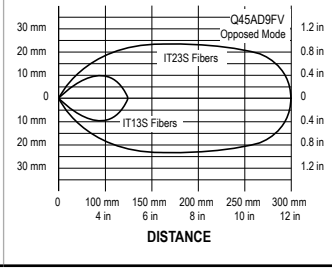

Glass Fiber Optic, Visible Red (Diffuse Mode)

Excess Gain

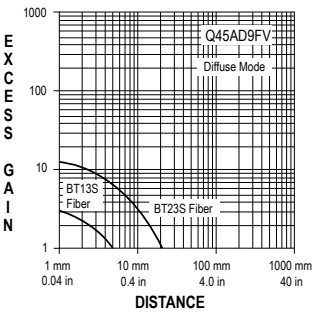

Beam Pattern

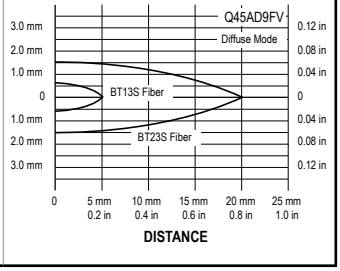

Dimensions

NAMUR Series Opposed, Retro, and Diffuse Sensing Modes (Model Suffix E, R, D, DL, LP, and LV)

Cabled Models

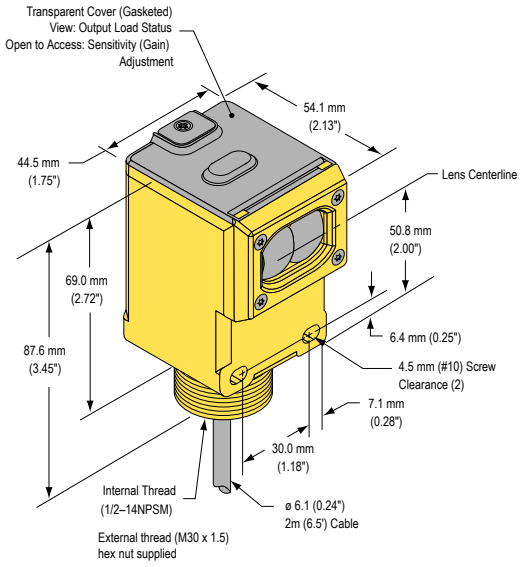

Quick-Disconnect 4-pin Euro-style Models

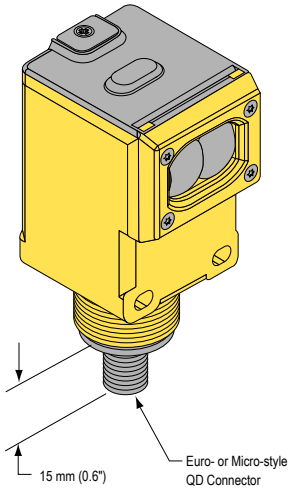

Convergent Sensor Models (CV and CV4)	Glass Fiber Optic Models (F and FV)	Plastic Fiber Optic Models (FP)

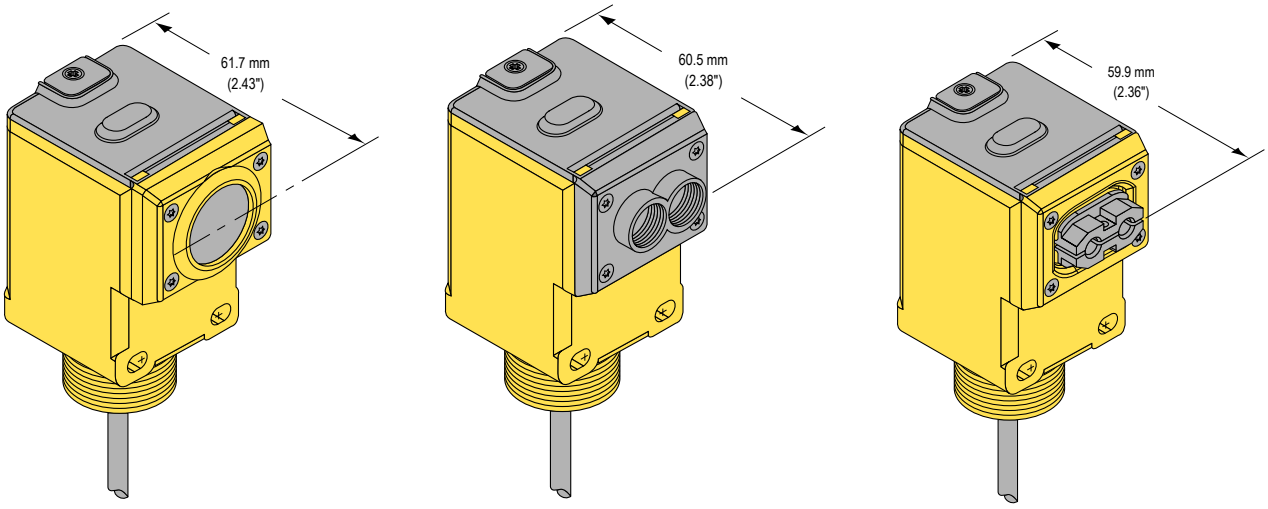

Accessories

4-Pin Threaded M12/Euro-Style Cordsets (for use with NAMUR sensors)				
Model	Length	Style	Dimensions	Pinout (Female)
MQD9-406	1.83 m (6 ft)	Straight	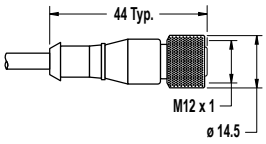	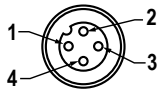
MQD9-415	4.57 m (15 ft)			
MQD9-430	9.14 m (30 ft)			
MQD9-406RA	1.83 m (6 ft)	Right-Angle	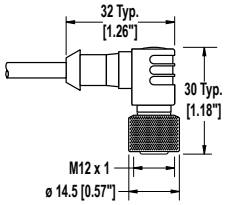	
MQD9-415RA	4.57 m (15 ft)			
MQD9-430RA	9.14 m (30 ft)			

1 = Brown
2 = Blue

Replacement Lens Assemblies	
Models	Description
UC-45L	Replacement lens for E, R, DL and LV models
UC-45LP	Replacement lens for LP
UC-45D	Replacement lens for D
UC-45F	Replacement lens for F and FV
UC-45FP	Replacement lens for FP
UC-45C	Replacement lens for CV
UC-45C4	Replacement lens for CV4
Q45 Series lens assemblies are field-replaceable.	

Mounting Brackets

SMB30C

- 30 mm split clamp, black PBT bracket
- Stainless steel mounting hardware included
- Mounting hole for 30 mm sensor

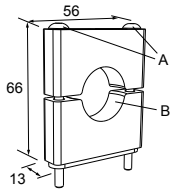

Hole center spacing: A=ø 45
Hole size: B=ø 27.2

SMB30SC

- Swivel bracket with 30 mm mounting hole for sensor
- Black reinforced thermoplastic polyester
- Stainless steel mounting and swivel locking hardware included

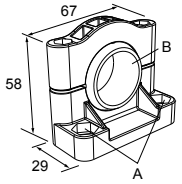

Hole center spacing: A=ø 50.8
Hole size: A=ø 7.0, B=ø 30.0

SMB30MM

- 12-ga. stainless steel bracket with curved mounting slots for versatile orientation
- Clearance for M6 (¼ in) hardware
- Mounting hole for 30 mm sensor

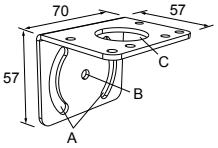

Hole center spacing: A = 51, A to B = 25.4
Hole size: A = 42.6 x 7, B = ø 6.4, C = ø 30.1

SMB30UR

- 2-piece universal swivel bracket for limit-switch style sensors
- 300 series stainless steel
- Stainless steel swivel locking hardware included

Hole center spacing: A to B=31.8, B to C=19.0, A to C=50.8, D=50.8
Hole size: C=6.9x32, D=73.0x6.9

Q45 NAMUR Sensors Certification Notes

Quick-Disconnect (Q-suffix) Sensor, Connector View

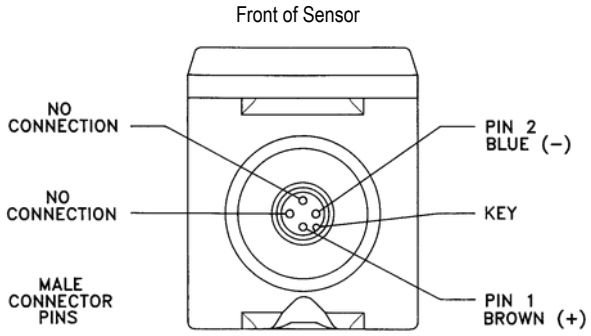

Wiring: Cabled and Quick-Disconnect (Q-suffix) Models

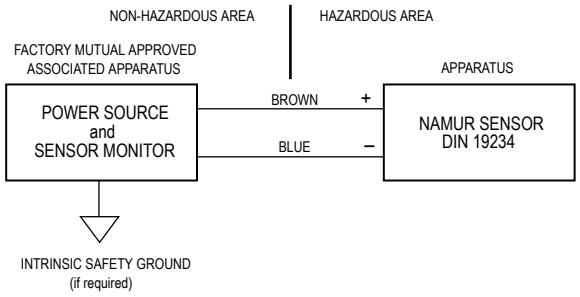

Hazardous Area Application

Entity Parameters. Associated Apparatus may include amplifiers and barriers to monitor apparatus supply current which is the apparatus output signal. Associated apparatus must limit both supply voltage and supply current in the event of failures.

Entity Parameters	
Associated Apparatus	Sensor Apparatus
Voc ≤ 15 V dc	Vmax = 15 V dc
Isc ≤ 60 mA	Imax = 60 mA
Ca ≥ *C (cable) + Ci	Ci = 0.3 µF
La ≥ *L (cable) + Li	Li = 0

Entity Parameters	
Associated Apparatus	Sensor Apparatus
	Pi = 225 mW
Cable Parameters (if unknown)	
*C(cable) = 60 pF/ft	
*L(cable) = 0.2 µH/ft	

FM Installation Notes

a) Associated Apparatus (barrier) entity parameters must meet the following requirements:

Voc ≤ Vmax
Ca ≥ Ci + Ccable
Isc ≤ Imax
La ≥ Li + Lcable

b) The Associated Apparatus shall not be connected to any device that uses or generates in excess of 250 Volts rms or dc.

c) Intrinsic safety ground, if required for the Associated Apparatus, shall be less than 1 ohm.

d) Installation shall be in accordance with the National Electrical Code (ANSI/NFPA70), local codes, Associated Apparatus manufacturer's installation requirements and ANSI/ISA RP12.6 for hazardous (classified) location installation.

e) Associated Apparatus is not required for installation of the devices within a Division 2 hazardous (classified) location. The maximum voltage for Division 2 installation is 15 V dc.

f) Maximum connector torque: 6 foot-lbs

CSA Installation Notes

a) Associated Apparatus (barrier) entity parameters must meet the following requirements:

Voc ≤ Vmax
Ca ≥ Ci + Ccable
Isc ≤ Imax
La ≥ Li + Lcable

b) The Associated Apparatus shall not be connected to any device that uses or generates in excess of 250 Volts rms or dc.

c) Intrinsic safety ground, if required for the Associated Apparatus, shall be less than 1 ohm.

d) Installation shall be in accordance with the Canadian Electrical Code, Part 1.

e) Associated Apparatus (barrier) shall be installed in accordance with the manufacturer's instructions.

f) Associated Apparatus is not required for installation of the devices within a Division 2 hazardous (classified) location when installed in, or through the wall of a suitable enclosure with provision or connection of rigid metal conduit per the Canadian Electrical Code, as acceptable to the local inspection authority having jurisdiction. The maximum rating for Division 2 installation is 15 V dc, 60 mA.

g) In Division 2 installations, observe the following warnings:



WARNING: Explosion Hazard

Do not disconnect equipment unless power has been switched Off or the area is known to be non-hazardous.



WARNING: AVERTISSEMENT: RISQUE D'EXPLOSION

Avant de deconnecter l'equipment, couper le courant ou s'assurer que l'emplacement est designé non dangereux.

Repairs and Translations

Obtain assistance with product repairs by contacting your local Banner Engineering Corp distributor or by calling Banner directly at (763) 544-3164. Access literature translated into your native language on the Banner website at *www.bannerengineering.com* or contact Banner directly at (763) 544-3164.

Banner Engineering Corp Limited Warranty

Banner Engineering Corp. warrants its products to be free from defects in material and workmanship for one year following the date of shipment. Banner Engineering Corp. will repair or replace, free of charge, any product of its manufacture which, at the time it is returned to the factory, is found to have been defective during the warranty period. This warranty does not cover damage or liability for misuse, abuse, or the improper application or installation of the Banner product.

THIS LIMITED WARRANTY IS EXCLUSIVE AND IN LIEU OF ALL OTHER WARRANTIES WHETHER EXPRESS OR IMPLIED (INCLUDING, WITHOUT LIMITATION, ANY WARRANTY OF MERCHANTABILITY OR FITNESS FOR A PARTICULAR PURPOSE), AND WHETHER ARISING UNDER COURSE OF PERFORMANCE, COURSE OF DEALING OR TRADE USAGE.

This Warranty is exclusive and limited to repair or, at the discretion of Banner Engineering Corp., replacement. IN NO EVENT SHALL BANNER ENGINEERING CORP. BE LIABLE TO BUYER OR ANY OTHER PERSON OR ENTITY FOR ANY EXTRA COSTS, EXPENSES, LOSSES, LOSS OF PROFITS, OR ANY INCIDENTAL, CONSEQUENTIAL OR SPECIAL DAMAGES RESULTING FROM ANY PRODUCT DEFECT OR FROM THE USE OR INABILITY TO USE THE PRODUCT, WHETHER ARISING IN CONTRACT OR WARRANTY, STATUTE, TORT, STRICT LIABILITY, NEGLIGENCE, OR OTHERWISE.

Banner Engineering Corp. reserves the right to change, modify or improve the design of the product without assuming any obligations or liabilities relating to any product previously manufactured by Banner Engineering Corp.