Q16 series

Ø16 mm panel mount LED indicators



DISTINCTIVE FEATURES

Secret until lit polycarbonate decals or custom engraving

10 mm colored diffused epoxy lens or 10 mm water clear super bright LEDs

(2.8 x 0.8) solder lug/faston terminals, pins or (200 mm long) wire terminations

Available in RGB



ENVIRONMENTAL SPECIFICATIONS

- IP67 sealing option (EN60529)
- Operating & Storage Temperature Range:
  Rear plastic body: -30 ° C to +65° C (–22 °F to +149 °F)
  Rear epoxy body: -40 ° C to +85° C (–40 °F to +185 °F)

GENERAL SPECIFICATIONS

- Max Reverse Voltage: 5 V
- Viewing Angle: 30–100° (dependant on model)
- Life Expectancy: 100,000 hours
- Torque: 75 cNm
- Maximum panel thickness 11 mm
- Insulation resistance : 4,000 MΩ at 500 VDC

MATERIALS

- Plated brass bezel finished in bright chrome, black or satin grey and moulded polycarbonate rear body

MOUNTING

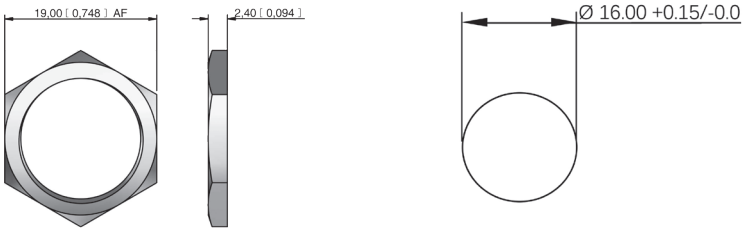

The company reserves the right to change specifications without notice.

All LED characteristics are dependent upon environmental conditions. Therefore published data should be considered nominal and subject to variations.

.

Q16 series

Ø16 mm panel mount LED indicators

ELECTRICAL SPECIFICATIONS

STANDARD LED INTENSITY

LED COMPONENT SPECIFICATIONS			
	Prominent and Recessed	Flush	Forward Voltage
HE Red	330 mcd	10 mcd	2.1 V
Green	330 mcd	5 mcd	2.1 V
Yellow	500 mcd	4 mcd	2.1 V
Blue	540 mcd	100 mcd	3.3 V
White	1,000 mcd	150 mcd	3.3 V
Orange	80 mcd	200 mcd	2.2 V
Bi-color (Typical) (Red/Green)	220/150 mcd	14/10 mcd	2.0 V/2.2 V
Tri-color (Typical) (Red/Green/Yellow)	60/50/50 mcd	15/10/30 mcd	2.0 V/2.2 V/2.1 V

Bi-color - The color is changed by reversing the polarity of the supply voltage.
Tri-color - The indicator has red and green LEDs, when both connected yellow is produced.

SUPER BRIGHT LED INTENSITY

LED COMPONENT SPECIFICATIONS			
	Prominent and Recessed	Flush	Forward Voltage
HE Red	17,000 mcd	2000 mcd	2.2 V
Green	11,000 mcd	680 mcd	3.5 V
Yellow	12,000 mcd	350 mcd	2.3 V
Blue	2,500 mcd	250 mcd	3.3 V
White	4,400 mcd	250 mcd	3.3 V
Orange	2,800 mcd	300 mcd	2.1 V

HYPER BRIGHT LED INTENSITY

LED COMPONENT SPECIFICATIONS			
	Prominent and Recessed	Flush	Forward Voltage
HE Red	2,800 mcd	800 mcd	2.0 V
Green	2,200 mcd	250 mcd	3.2 V
Yellow	1,300 mcd	250 mcd	2.0 V
Orange	850 mcd	200 mcd	2.1 V

RGB LED INTENSITY

ITEM	SYMBOL	CONDITION	TYP.
DC Forward Voltage	V_F(R)	IF=20 mA	2.1
	V_F(B/G)	IF=20 mA	3.1
Luminous Intensity	Iv (Red)		220 mcd
	Iv (Green)		500 mcd
	Iv (Blue)		100 mcd

Voltage	Operating Voltage (Min to Max)	Operating Current (Typical All Types)
02 (No Resistor)	1.8 to 3.3 VDC	20 mA max*
6 VDC	5.4 to 6.6 VDC	20 mA
12 VDC	10.8 to 13.2 VDC	20 mA
24 VDC	21.6 to 26.4 VDC	20 mA
28 VDC	25.2 to 30.8 VDC	20 mA
110 VAC	99 to 121 VAC	6 mA
220 VAC	207 to 235 VAC	3 mA

* Customer to supply resistor for desired operating current.

ADDITIONNAL INFORMATION ON LED COMPONENTS

- Bi-color leds, by connecting the gold faston (+)one color is produced, by reversing the supply voltage another color is produced – bi-colors are available up to 28 VDC
- The tri-color led has red and green leds when both are connected yellow is produced.
- The operating voltage must not be exceeded by more that 10% as this will result in reduced life expectancy
- Luminous intensity is measured at 20 mA on a discrete led unless otherwise stated.
- Luminous intensities and color shades of white LEDs may vary within a batch.
- Luminous intensity will be reduced with lower operating current.
- Recommended usage:
  - Standard: Homogenous light output that is good for indoor applications.
  - Hyper Bright: Homogenous light output that is good for outside viewing and is daylight visible.
  - Super Bright: A water clear LED that is good for long distance viewing and is daylight visible.

CONNECTIONS

REAR EPOXY WIRES
FOR RGB OPTION

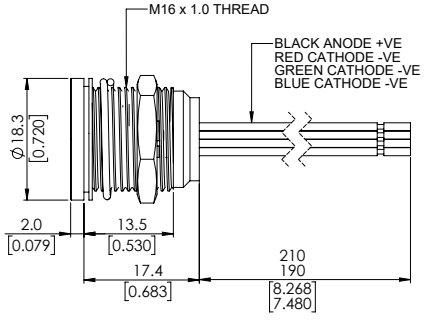

Q16 series

Ø16 mm panel mount LED indicators

BUILD YOUR PART NUMBER

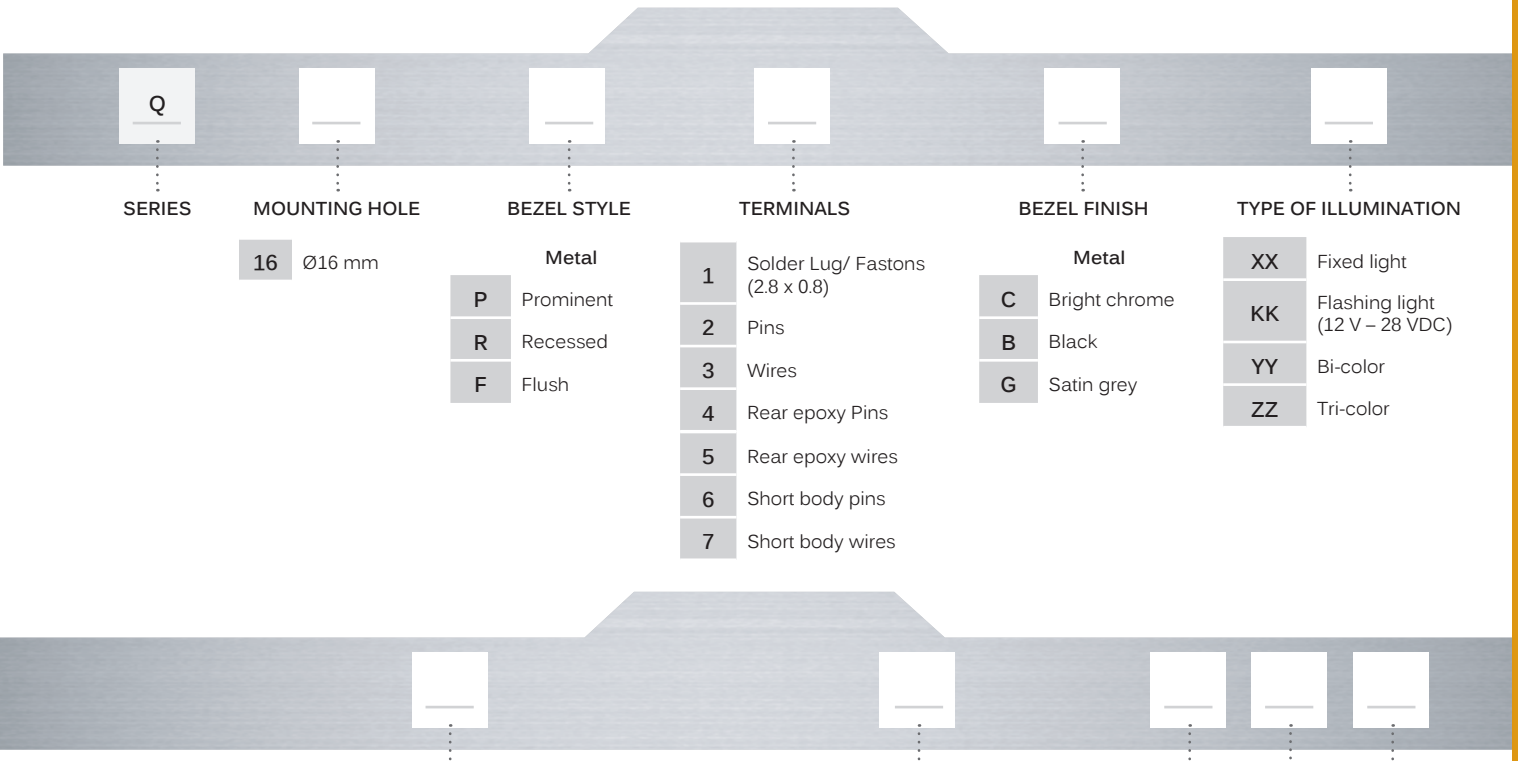

SERIES

Q

MOUNTING HOLE

16	Ø16 mm

BEZEL STYLE

Metal

P	Prominent
R	Recessed
F	Flush

TERMINALS

1	Solder Lug/ Fastons (2.8 x 0.8)
2	Pins
3	Wires
4	Rear epoxy Pins
5	Rear epoxy wires
6	Short body pins
7	Short body wires

BEZEL FINISH

Metal

C	Bright chrome
B	Black
G	Satin grey

TYPE OF ILLUMINATION

XX	Fixed light
KK	Flashing light (12 V – 28 VDC)
YY	Bi-color
ZZ	Tri-color

LED COLOR

R	Red
G	Green
Y	Yellow
B	Blue
W	White
O	Orange
HR	Hyper bright Red
HG	Hyper bright green
HY	Hyper bright yellow
HO	Hyper bright orange
SR	Super bright Red
SG	Super bright green
SY	Super bright yellow
SB	Super bright blue
SW	Super bright white
RG	Red/green
RY	Red/yellow
GY	Green/yellow
RYG	Red/yellow/ green
RGB	Red/Green/ Blue*

* Terminals option 5 and common anode only

VOLTAGE

02	no resistor**
06	6 VDC
12	12 VDC
12A	12 VAC/DC
24	24 VDC
24A	24 VAC/DC
28	28 VDC
28A	28 VAC/DC
110	110 VAC
220	220 VAC

** please refer to the forward voltage in electrical specifications

SEALING

(Blank)	Unsealed
E	IP67

CUSTOM OPTIONS

See end of series

(Blank)	Common cathode
-CA	Common anode

ABOUT THIS SERIES

Notice: please note that not all combinations of above numbers are available.

- Gold faston terminal denotes anode (+), silver terminal denotes cathode (-)
- Standard and Bi-Colour are provided in Standard wire length is 200mm, 24AWG UL1061, Red wire denotes anode (+), Black wire denotes cathode (-) for other lengths consult APEM.
- Take care when soldering to the faston terminals (recommended solder temperature 300 °C - 3 sec)
- Body options 2, 4 and 6 are only available without integral resistor (02).
- Standard tri-color faston terminals are two anodes (+) and one cathode (-)
- Tri-color wires are one red (+) and one green (+) anode and one black (-) cathode
- Tri-color pins are center (–) cathode, shortest (+) anode pin green, longest (+) anode pin red
- We recommend using hyperbright or superbright leds for use at 110 VAC and 220 VAC
- For leds with alternative voltages and for multi-voltage options please consult APEM

Q16 series

Ø16 mm panel mount LED indicators

PROMINENT BEZEL



SOLDER LUG/FASTON

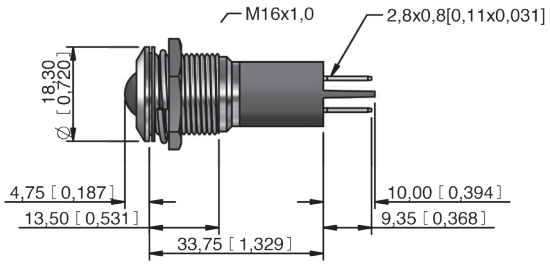

WIRES

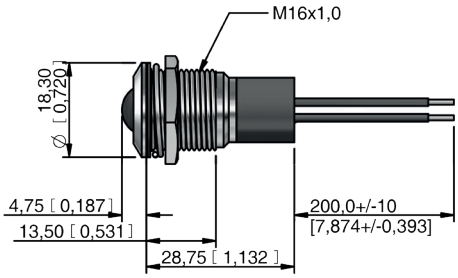

PINS

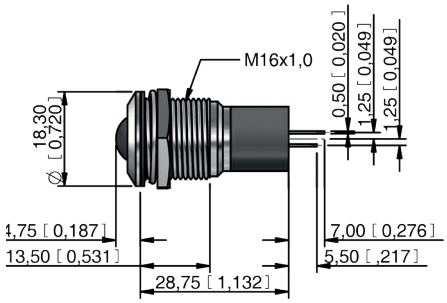

REAR EPOXY WIRES

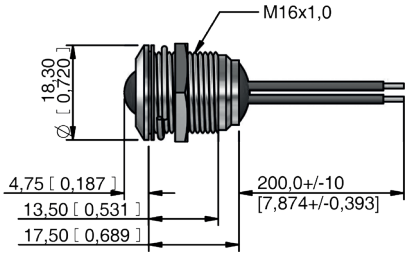

REAR EPOXY PINS

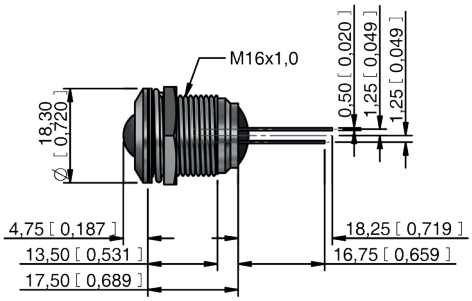

SHORT BODY WIRES

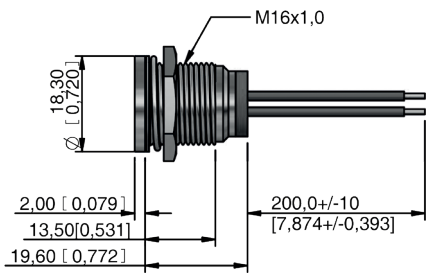

SHORT BODY PINS

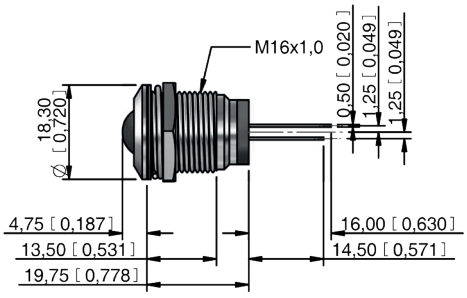

Q16 series

Ø16 mm panel mount LED indicators

FLUSH BEZEL



SOLDER LUG/FASTON

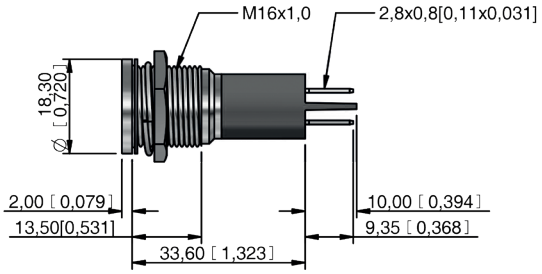

WIRES

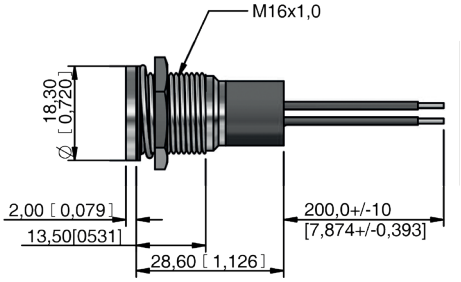

PINS

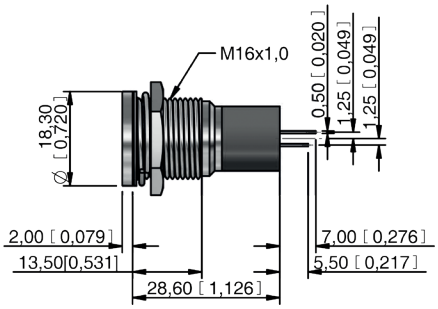

REAR EPOXY WIRES

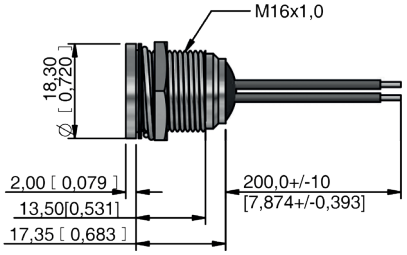

REAR EPOXY PINS

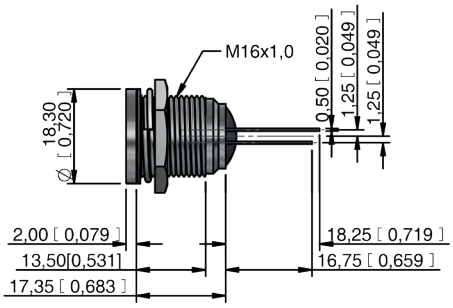

SHORT BODY WIRES

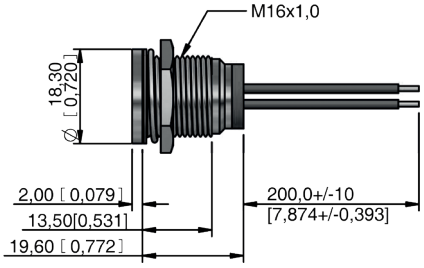

SHORT BODY PINS

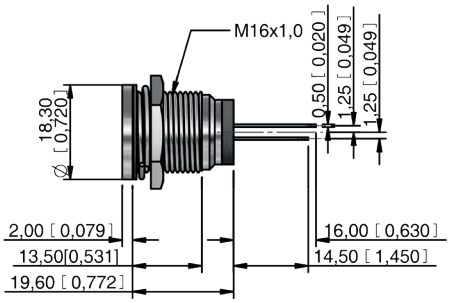

Q16 series

Ø16 mm panel mount LED indicators

RECESSED BEZEL



SOLDER LUG/FASTON

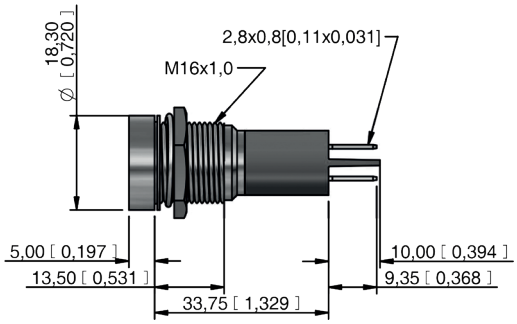

WIRES

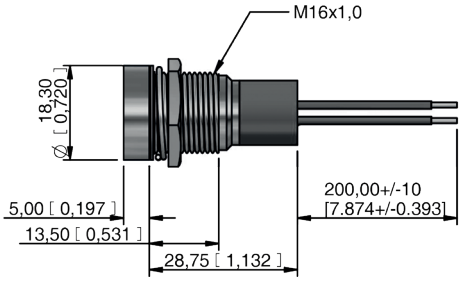

PINS

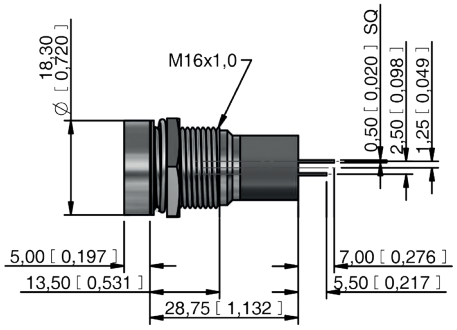

REAR EPOXY WIRES

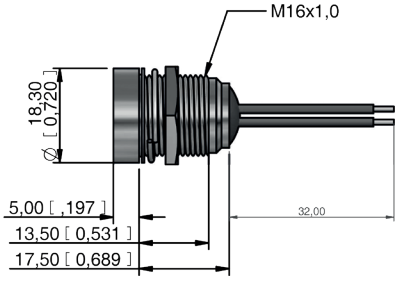

REAR EPOXY PINS

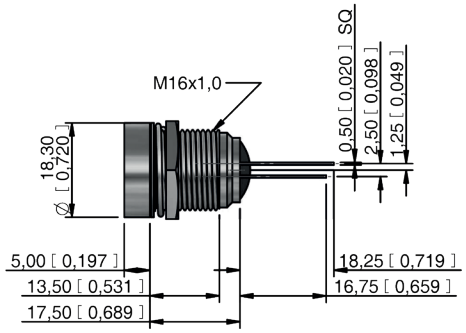

SHORT BODY WIRES

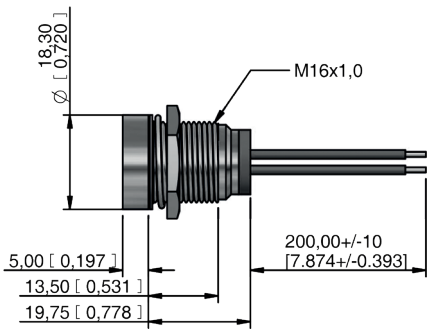

SHORT BODY PINS

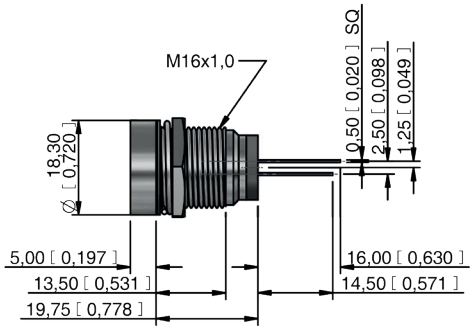

Q16 series

Ø16 mm panel mount LED indicators

CUSTOM ENGRAVING

Some common codes are listed above, for your custom requirements please contact APEM.
Unless specified standard engraving with white infill will be supplied.
Suffix the part number with legend code :

High beam **-0AJ**	Low beam **-097**	Rear fog **-027**	Front fog **-026**	Windscreen wiper **-021**	Windscreen washer **-022**	Ventilator fan **-023**
Turn Signal **-0AH**	Side lights **-098**	Horn **-041**	Hazard warning **-013**	Heating **-018**	Brake test **-0BU**	Arrow **-0K6**
Battery **-0AG**	Oil can **-0GP**	Windscreen heating **-020**	ABS **-086**	Engine coil **-0EL**	Seat belt **-0SB**	USB connection **-0UB**
Steam **-0ST**	ECU **-0EU**	Side step **-0AD**	Air con **-012**	Engine **-040**	Boot/Trunk Release **-0BR**	



Q16 series

Ø16 mm panel mount LED indicators

SECRET UNTIL LIT POLYCARBONATE INSERTS

Some common codes are listed above, for your custom requirements please contact APEM. Please note Secret until lit inserts only available with flush metal bezel (Option F)
Suffix the part number with legend code :

Turn signal **-3AH**	Hazard **-313**	Oil can **-3GP**	Battery **-3AG**	Rear fog **-327**	Low beam **-397**	Brake test **-3BU**
Arrow **-3K6**	High beam **-3AJ**	Park brake **-3PB**	Side lights **-398**	Seat belt **-3SB**	Type pressure **-3TP**	Check engine **-3CE**
Engine temperature **-3EC**	Fuel **-3FP**	Brake failure **-3BF**				


Off


On

CABLE LENGTH AND CONNECTOR







For custom cable length and connectors contact APEM.