trumeter
innovation by design

731 Series

Electromechanical Hour Meter



Our 731 Series provides a family of compact 7 figure, DC Hour Meters. Models are available in the standard industry housings, 2- Hole rectangular, flush-round and flush-rectangular. DC Models are quartz controlled for high reliability and accuracy. A choice of two rectangular panel cutouts are offered 1.45” X 0.95” [36.8mm X 24.1mm] or 1.45” X 0.87” [36.8mm X 2.1mm]. The Round meter has a panel cutout of 1.99” [50.5mm].

Key Features

- 7 figure, 99999.99
- Various voltage inputs
- Quartz accuracy (DC)
- Large figures, 0.14” [3.6mm]
- CE Compliant, ROHS, UKCA
- UL/cUL Recognized for DC
- Options include:
  - Special voltages
  - Terminations
  - Panel cutout

Applications

- Office Equipment
- Test Equipment
- Medical Equipment

trumeter
innovation by design

custom is our passion

Specification

Figures	7 figures, 0.14” [3.6mm] 99999.99
Reset	Non-reset
Voltages	10-28VDC
Power	0.4 watts DC
Mount	Clip or mounting holes
Terminations	1/4” [6.3mm] spade terminals (DC)
Accuracy	0.01% (DC) quartz
Case Material	Black polymer
Weight	1.2oz. [35g]
Front Panel	IP65
Temp. Range	-22°F to +180°F [-30°C to +82°C]
Storage Temp.	-40°F to +185°F [-40°C to +85°C]
Vibration	1g [10/500Hz] IEC 68-T2-34
Shock	30g [18ms] IEC 68-T2-27 25g [16ms] IEC 68-T2-19
Approvals	CE Compliant, UKCA, UL/cUL Recognized for DC

Dimensions

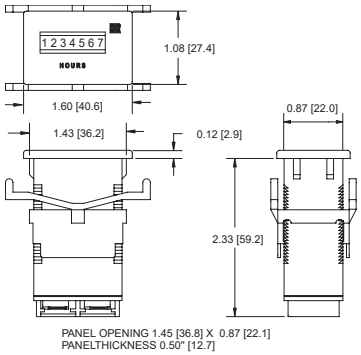

PANEL OPENING 1.45 [36.8] X 0.87 [22.1]
PANELTHICKNESS 0.50" [12.7]

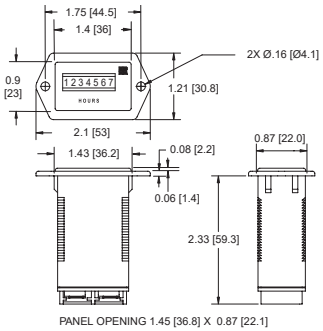

PANEL OPENING 1.45 [36.8] X 0.87 [22.1]

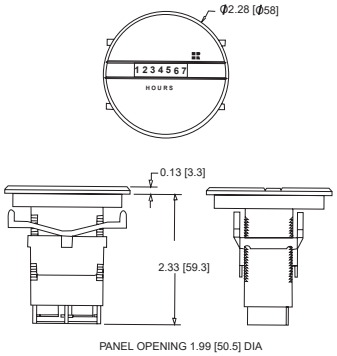

PANEL OPENING 1.99 [50.5] DIA

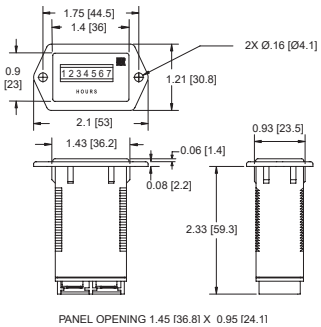

PANEL OPENING 1.45 [36.8] X 0.95 [24.1]

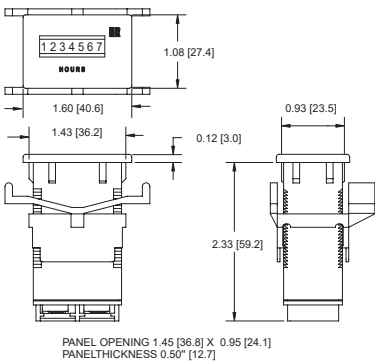

PANEL OPENING 1.45 [36.8] X 0.95 [24.1]
PANELTHICKNESS 0.50" [12.7]

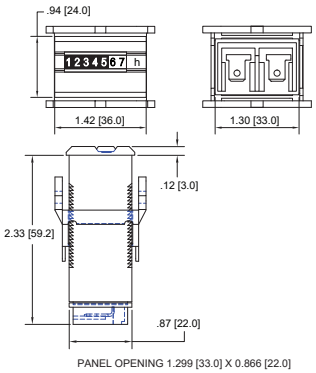

PANEL OPENING 1.299 [33.0] X 0.866 [22.0]

Part Numbers

			Panel Cut-out			
Models	**Voltage DC**	**Mount**	**1.45 X .87**	**1.45 X .95**	**1.99**	**1.299 X .866**
731-0006	10-28VDC	Round			X	
731-0040	10-28VDC	2-Hole	X			
731-0041	10-28VDC	Flush Rect	X			
731-0042	10-28VDC	Flush Rect.		X		
731-0051	10-28VDC	2-Hole		X		
731-0100	10-28VDC	Flush Rect.				X

trumeter
innovation by design



These 7 figure, DC hour meters with running indicators, offer crisp, distinctive styling for many panel applications. Available in square and round bezel, flush mount, or three-hole round panel mount. Each is light-weight, low power, and carry UL and CE approvals.

Key Features

- 7 figure, 99999.99
- Various voltage inputs
- Distinctive styling
- Options include:
  - Terminations
  - DIN rail
  - Voltages

Applications

- Office Equipment
- Test Equipment
- Medical Equipment

Specification

Figures	7 figures, 0.14'' high [3.6mm], 99,999.99 hours
Reset	Non-reset
Voltages	10-80VDC
Power	1.2 watt maximum (DC)
Mount	Panel (mounting hardware included)
Terminations	1/4'' [6.3mm] spade terminals, with removable screws, or 8'' [203mm] wire leads
Front Panel	IP65
Temp. Range	-22°F to +158°F [-30°C to +70°C]
Weight	1.6 oz. [46g]
Approvals	UL Recognized, CE Compliant, ROHS, UKCA

trumeter
innovation by design

custom is our passion

Dimensions

2.28” Dia. Flush

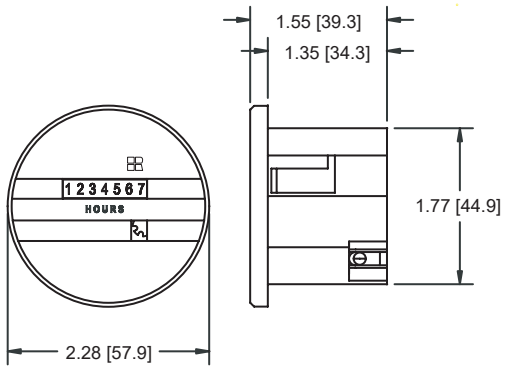

Panel cutout: 1.99” [50] Dia. or 1.81” [46] Sq.

3 - Hole Round

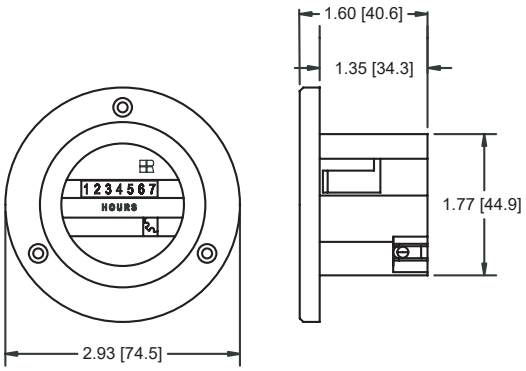

Panel cutout: 1.99” [50] Dia. or 1.81” [46] Sq.
Screws provided: 4-40 x 5/8” [16]
Bolt hole circle: 2.44” [62]

1.89” or 2.05” Square

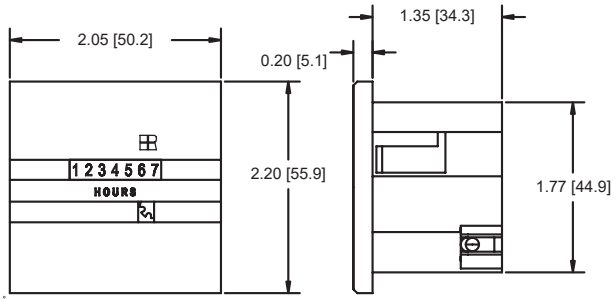

Panel cutout: 1.99” [50] Dia. or 1.81” [46] Sq.
(for 1.89” Sq. use 1.81” [46] Sq. cutout only)

Part Numbers

731-0046	10-80VDC, 2.93” Dia., 3-hole round, screw termination
731-0180	10-80VDC, 1.89” square, screw termination
T.008.171	55mm Bezel Adapter
T.008.177	72mm Bezel adapter



www.trumeter.com

Trumeter (Europe)
Pilot Mill
Alfred Street
Bury,
BL9 9EF
Tel: +44 161 674 0960
Email: sales.uk@trumeter.com

Trumeter (The Americas)
6601 Lyons Rd, Suite H-7
Coconut Creek, Florida
FL 33073,
USA
Tel: +1 954 725 6699
Email: sales.usa@trumeter.com

Innovative Design Technologies Sdn. Bhd
Lot 5881, Lorong Iks Bukit Minyak 1
Taman Perindustrian Iks, 14000 Bukit Tengah
Penang, Malaysia
Web: www.idtworld.com
Tel: + 604 5015700
Email: sales.my@idtworld.com