DATASHEET - PKZM0-0,4



Motor-protective circuit-breaker, 3p, Ir=0.25-0.4A, screw connection

Part no.	**PKZM0-0,4**
Catalog No.	**072732**
Alternate Catalog No.	**XTPRP40BC1NL**
EL-Nummer (Norway)	**4355123**

Powering Business Worldwide

Delivery program

Product range			PKZM0 motor protective circuit-breakers up to 32 A
Basic function			Motor protection
			IE3
Notes			Also suitable for motors with efficiency class IE3. IE3-ready devices are identified by the logo on their packaging.
Connection technique			Screw terminals
Contact sequence			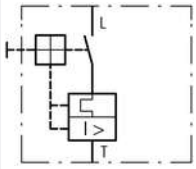
Max. motor rating			
AC-3			
220 V 230 V 240 V	P	kW	0.06
380 V 400 V 415 V	P	kW	0.09
440 V	P	kW	0.12
500 V	P	kW	0.12
660 V 690 V	P	kW	0.18
Rated uninterrupted current	I_u	A	0.4
Setting range			
Overload releases	I_r	A	0.25 - 0.4
short-circuit release			
max.	I_{rm}	A	6.2
Phase-failure sensitivity			IEC/EN 60947-4-1, VDE 0660 Part 102
Explosion protection (according to ATEX 94/9/EC)			PTB 10, ATEX 3013, Ex II(2) GD Observe manual MN03402003Z-DE/EN.

Notes Overload trigger: tripping class 10 A
Can be snapped on to IEC/EN 60715 top-hat rail with 7.5 or 15 mm height.

Technical data

General

Standards			IEC/EN 60947, VDE 0660,UL, CSA
Climatic proofing			Damp heat, constant, to IEC 60068-2-78 Damp heat, cyclic, to IEC 60068-2-30
Ambient temperature			
Storage		°C	- 40 - 80
Open		°C	-25 - +55
Enclosed		°C	- 25 - 40

Mounting position			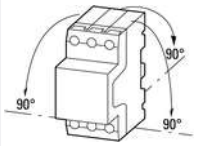
Direction of incoming supply			as required
Degree of protection			
Device			IP20
Terminations			IP00
Protection against direct contact when actuated from front (EN 50274)			Finger and back-of-hand proof
Mechanical shock resistance half-sinusoidal shock 10 ms to IEC 60068-2-27		g	25
Altitude		m	Max. 2000
Terminal capacity main cable			
Screw terminals			
Solid		mm^2	1 x (1 - 6) 2 x (1 - 6)
Flexible with ferrule to DIN 46228		mm^2	1 x (1 - 6) 2 x (1 - 6)
Solid or stranded		AWG	18 - 10
Stripping length		mm	10
Specified tightening torque for terminal screws			
Main cable		Nm	1.7
Control circuit cables		Nm	1

Main conducting paths

Rated impulse withstand voltage	U_{imp}	V AC	6000
Overvoltage category/pollution degree			III/3
Rated operational voltage	U_e	V AC	690
Rated uninterrupted current = rated operational current	$I_u = I_e$	A	0.4
Rated frequency	f	Hz	40 - 60
Current heat loss (3 pole at operating temperature)		W	5.22
Impedance per pole		mΩ	10500
Lifespan, mechanical	Operations	x 10^6	0.1
Lifespan, electrical (AC-3 at 400 V)			
Lifespan, electrical	Operations	x 10^6	0.1
Max. operating frequency		Ops/h	40
Short-circuit rating			
DC			
Short-circuit rating		kA	60
Notes			up to 250 V
Motor switching capacity			
AC-3 (up to 690V)		A	0.4
DC-5 (up to 250V)		A	0.4 (3 contacts in series)

Trip blocks

Temperature compensation			
to IEC/EN 60947, VDE 0660		°C	- 5 … 40
Operating range		°C	- 25 … 55
Temperature compensation residual error for T > 40 °C			≦ 0.25 %/K
Setting range of overload releases		x I_u	0.6 - 1
short-circuit release			Basic device, fixed: 15.5 x I_u
Short-circuit release tolerance			± 20%
Phase-failure sensitivity			IEC/EN 60947-4-1, VDE 0660 Part 102

Rating data for approved types

Switching capacity			
Maximum motor rating			
Three-phase			
200 V 208 V		HP	Hinweis: Motorleistung in diesem Bereich nach Bemessungsstrom berechnen. Angegebene Werte nach NEC Table 430-150

230 V 240 V		HP	Hinweis: Motorleistung in diesem Bereich nach Bemessungsstrom berechnen. Angegebene Werte nach NEC Table 430-150
460 V 480 V		HP	Hinweis: Motorleistung in diesem Bereich nach Bemessungsstrom berechnen. Angegebene Werte nach NEC Table 430-150
575 V 600 V		HP	Hinweis: Motorleistung in diesem Bereich nach Bemessungsstrom berechnen. Angegebene Werte nach NEC Table 430-150
Short Circuit Current Rating, type E		SCCR	
240 V		kA	65
480 Y / 277 V		kA	65
600 Y / 347 V		kA	50
Accessories required			BK25/3-PKZ0-E
Short Circuit Current Rating, group protection		SCCR	
600 V High Fault			
SCCR (fuse)		kA	50
max. Fuse		A	600
SCCR (CB)		kA	50
max. CB		A	600

Design verification as per IEC/EN 61439

Technical data for design verification			
Rated operational current for specified heat dissipation	I_n	A	0.4
Heat dissipation per pole, current-dependent	P_{vid}	W	1.74
Equipment heat dissipation, current-dependent	P_{vid}	W	5.22
Static heat dissipation, non-current-dependent	P_{vs}	W	0
Heat dissipation capacity	P_{diss}	W	0
Operating ambient temperature min.		°C	-25
Operating ambient temperature max.		°C	55
IEC/EN 61439 design verification			
10.2 Strength of materials and parts			
10.2.2 Corrosion resistance			Meets the product standard's requirements.
10.2.3.1 Verification of thermal stability of enclosures			Meets the product standard's requirements.
10.2.3.2 Verification of resistance of insulating materials to normal heat			Meets the product standard's requirements.
10.2.3.3 Verification of resistance of insulating materials to abnormal heat and fire due to internal electric effects			Meets the product standard's requirements.
10.2.4 Resistance to ultra-violet (UV) radiation			Meets the product standard's requirements.
10.2.5 Lifting			Does not apply, since the entire switchgear needs to be evaluated.
10.2.6 Mechanical impact			Does not apply, since the entire switchgear needs to be evaluated.
10.2.7 Inscriptions			Meets the product standard's requirements.
10.3 Degree of protection of ASSEMBLIES			Does not apply, since the entire switchgear needs to be evaluated.
10.4 Clearances and creepage distances			Meets the product standard's requirements.
10.5 Protection against electric shock			Does not apply, since the entire switchgear needs to be evaluated.
10.6 Incorporation of switching devices and components			Does not apply, since the entire switchgear needs to be evaluated.
10.7 Internal electrical circuits and connections			Is the panel builder's responsibility.
10.8 Connections for external conductors			Is the panel builder's responsibility.
10.9 Insulation properties			
10.9.2 Power-frequency electric strength			Is the panel builder's responsibility.
10.9.3 Impulse withstand voltage			Is the panel builder's responsibility.
10.9.4 Testing of enclosures made of insulating material			Is the panel builder's responsibility.
10.10 Temperature rise			The panel builder is responsible for the temperature rise calculation. Eaton will provide heat dissipation data for the devices.
10.11 Short-circuit rating			Is the panel builder's responsibility. The specifications for the switchgear must be observed.
10.12 Electromagnetic compatibility			Is the panel builder's responsibility. The specifications for the switchgear must be observed.
10.13 Mechanical function			The device meets the requirements, provided the information in the instruction leaflet (IL) is observed.

Technical data ETIM 7.0

Low-voltage industrial components (EG000017) / Motor protection circuit-breaker (EC000074)			
Electric engineering, automation, process control engineering / Low-voltage switch technology / Circuit breaker (LV < 1 kV) / Motor protection circuit-breaker (ecl@ss10.0.1-27-37-04-01 [AGZ529016])			
Overload release current setting		A	0.4 - 0.4
Adjustment range undelayed short-circuit release		A	6.2 - 6.2
With thermal protection			Yes
Phase failure sensitive			Yes
Switch off technique			Thermomagnetic
Rated operating voltage		V	690 - 690
Rated permanent current Iu		A	0.4
Rated operation power at AC-3, 230 V		kW	0.06
Rated operation power at AC-3, 400 V		kW	0.09
Type of electrical connection of main circuit			Screw connection
Type of control element			Turn button
Device construction			Built-in device fixed built-in technique
With integrated auxiliary switch			No
With integrated under voltage release			No
Number of poles			3
Rated short-circuit breaking capacity Icu at 400 V, AC		kA	150
Degree of protection (IP)			IP20
Height		mm	93
Width		mm	45
Depth		mm	76

Approvals

Product Standards			IEC/EN 60947-4-1; UL 60947-4-1; CSA - C22.2 No. 60947-4-1-14; CE marking
UL File No.			E36332
UL Category Control No.			NLRV
CSA File No.			165628
CSA Class No.			3211-05
North America Certification			UL listed, CSA certified
Specially designed for North America			No
Suitable for			Branch circuit: Manual type E if used with terminal, or suitable for group installations

Characteristics

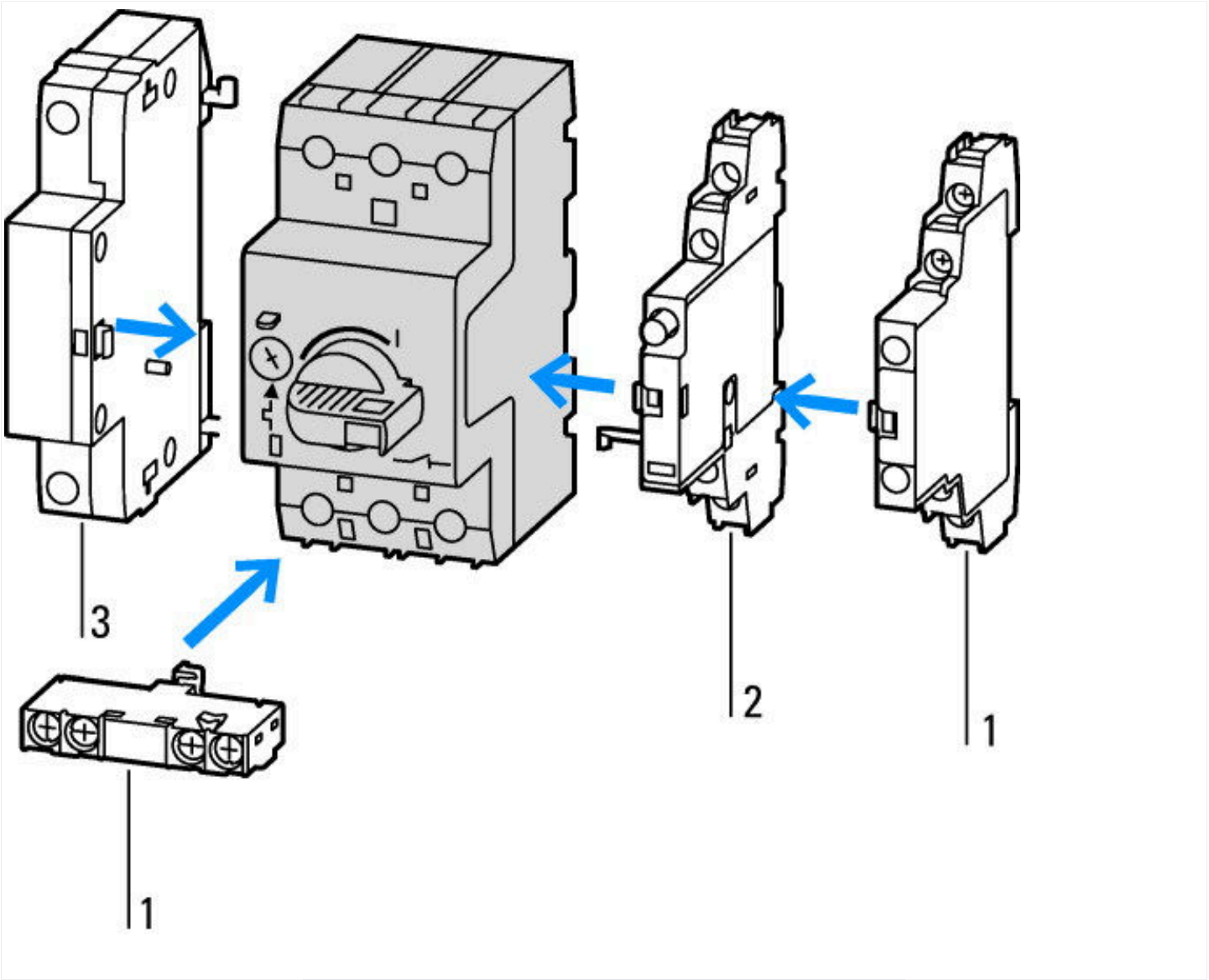

1: Standard auxiliary contact
2: Trip-indicating auxiliary contact
3: Shunt releases, undervoltage releases

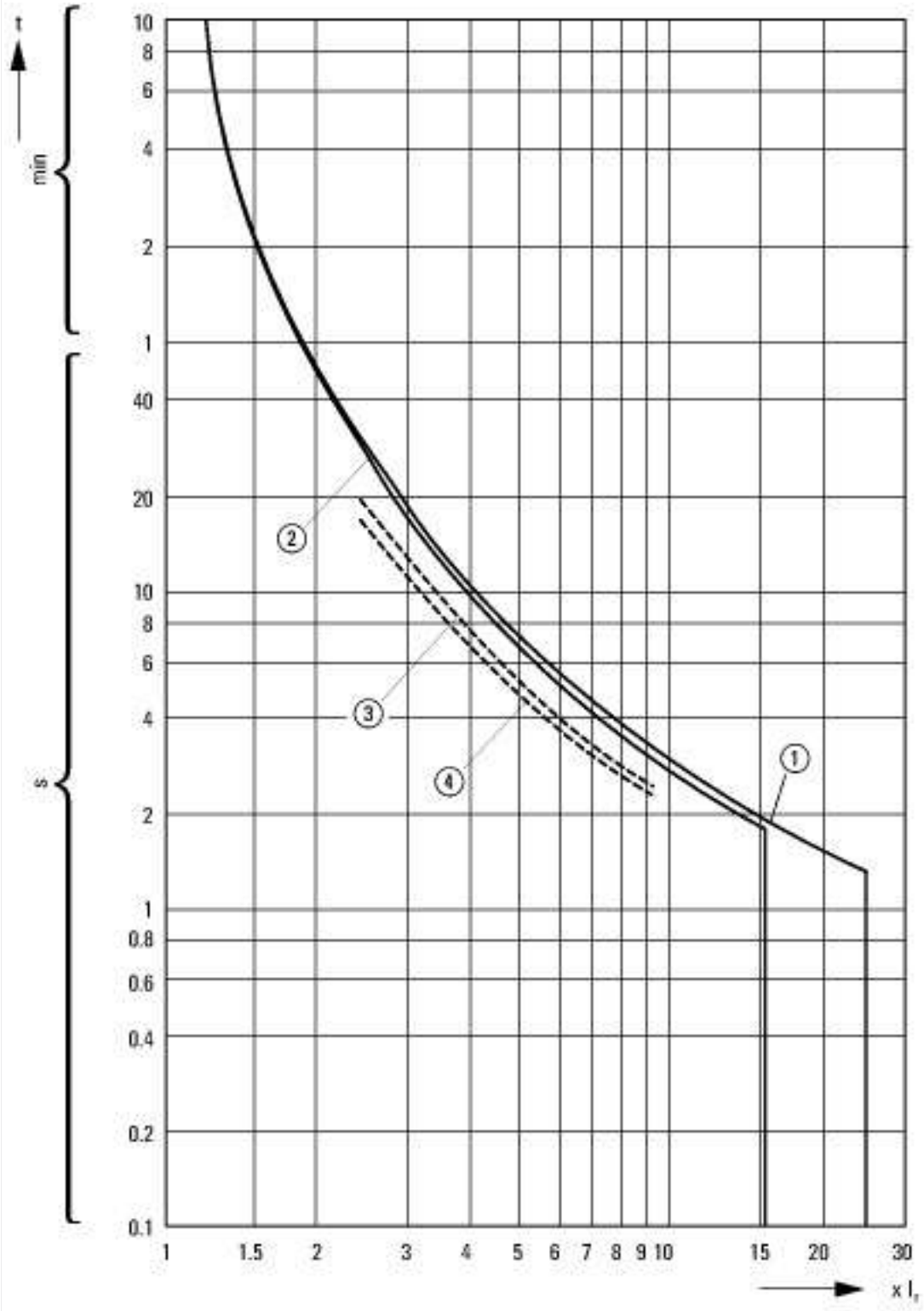

Tripping characteristics motor circuit breaker PKZM0-..., PKZM01
1: Minimum level, 3-phase
2: Maximum level, 3-phase
3: Minimum marker, 2-phase
4: Highest marker, 2-phase

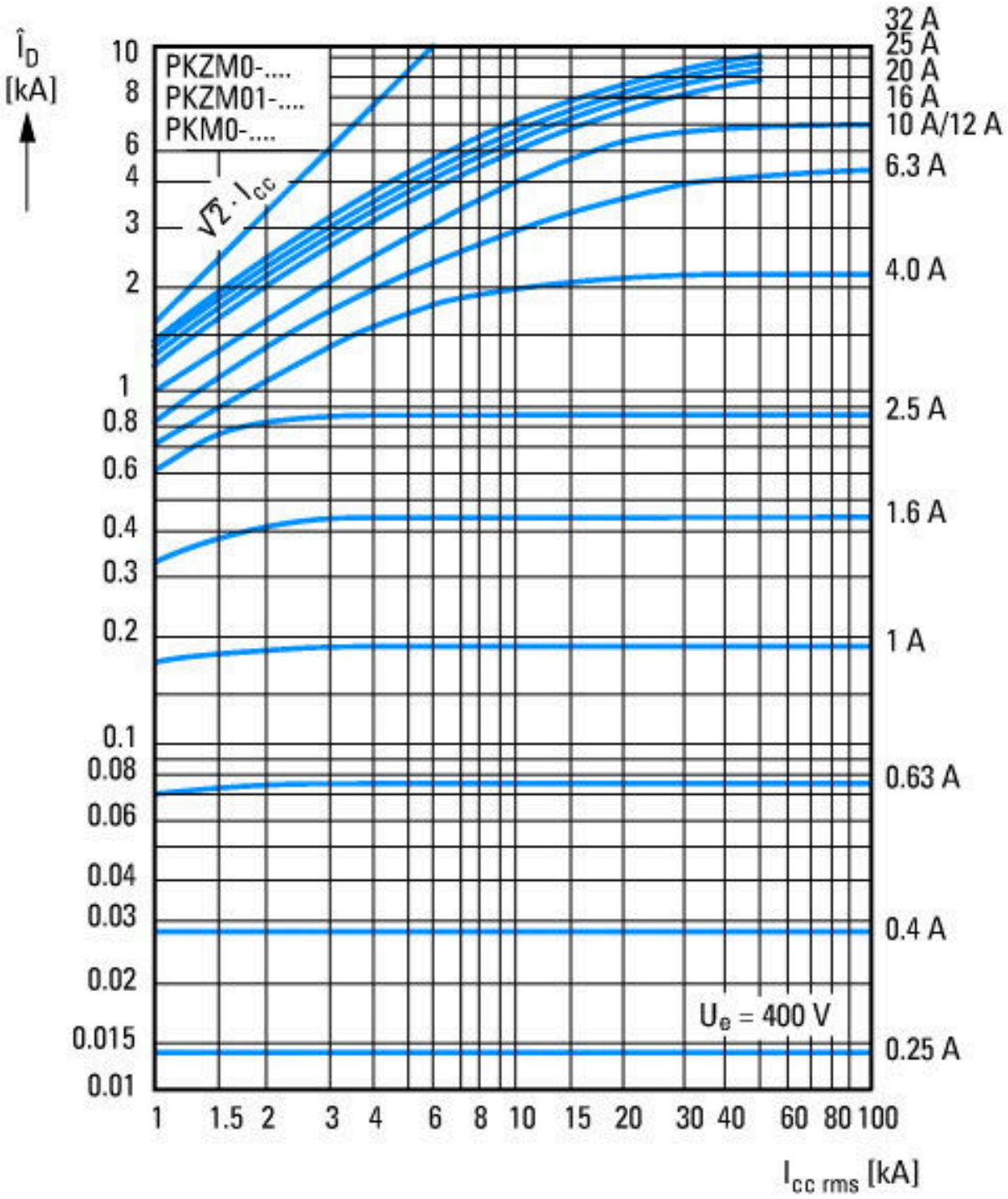

Let-through current

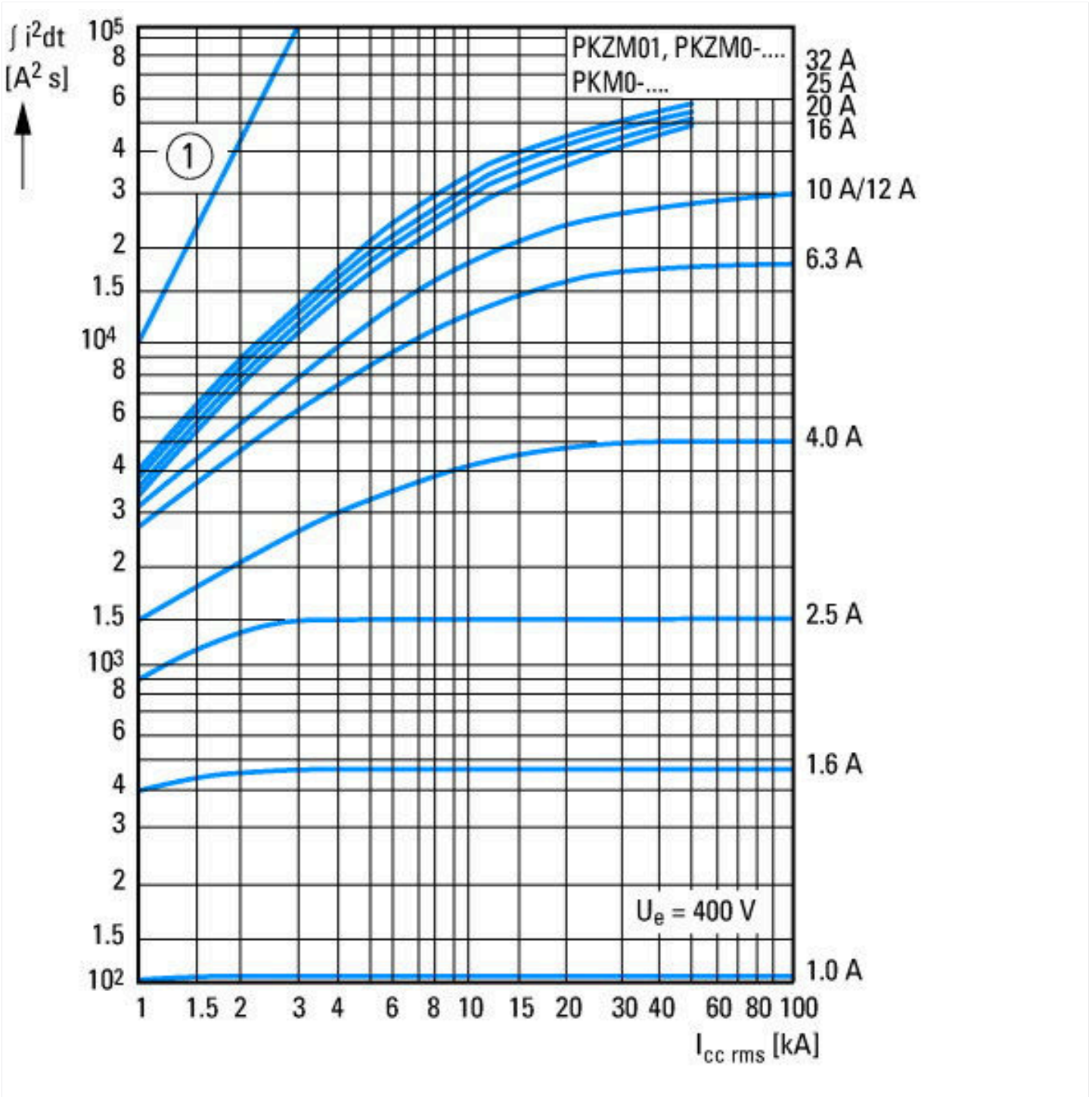

① 1 half-cycle
Let-through energy

Dimensions

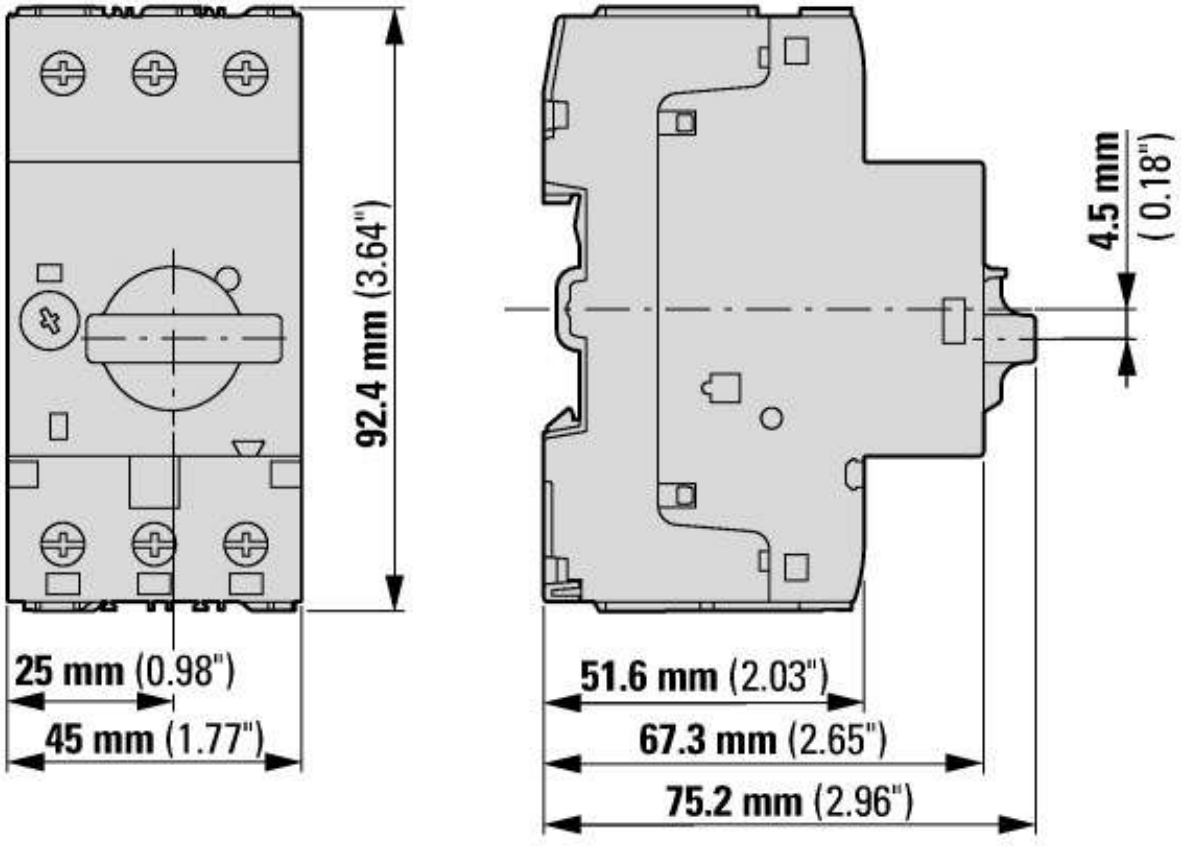

Motor-protective circuit-breaker with standard auxiliary contact
PKZM0-…(+NHI-E-…-PKZ0)
PKZM0-…-T(+NHI-E-…-PKZ0)
PKM0-…(+NHI-E-…-PKZ0)

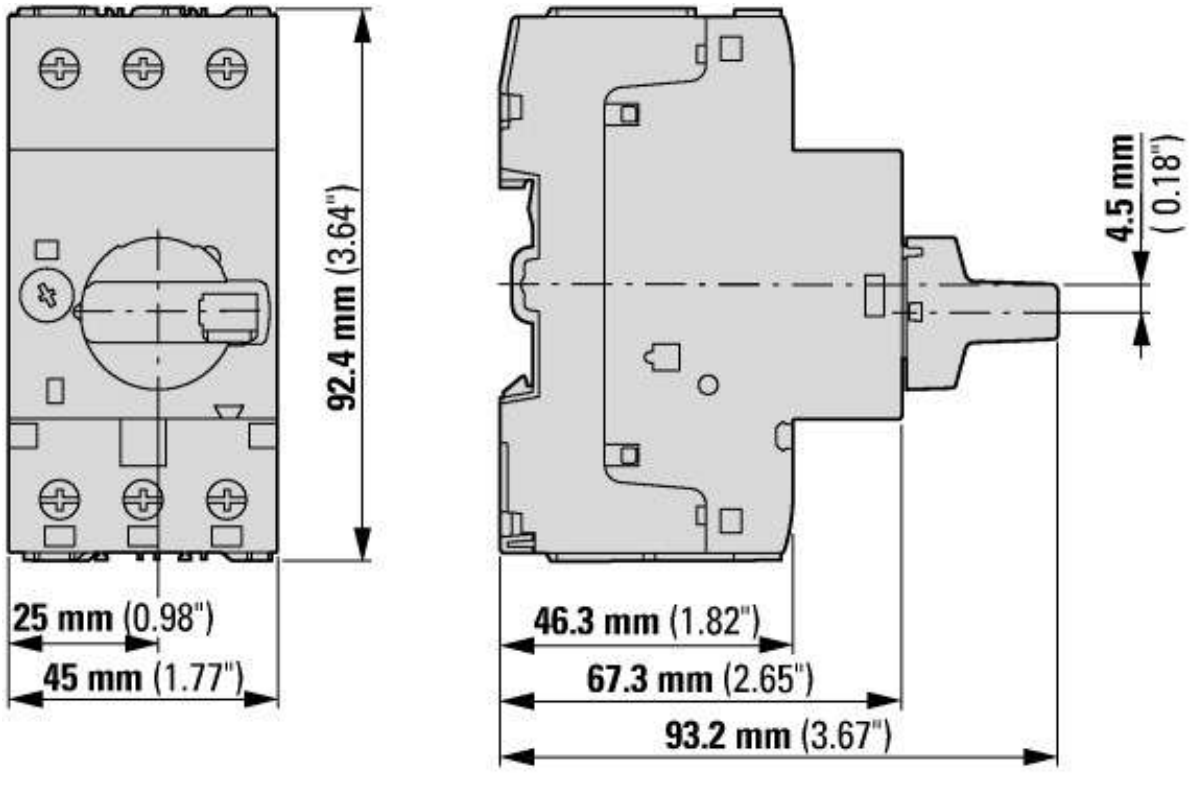

Motor-protective circuit-breakers with lockable rotary handles
PKZM0-…+AK-PKZ0

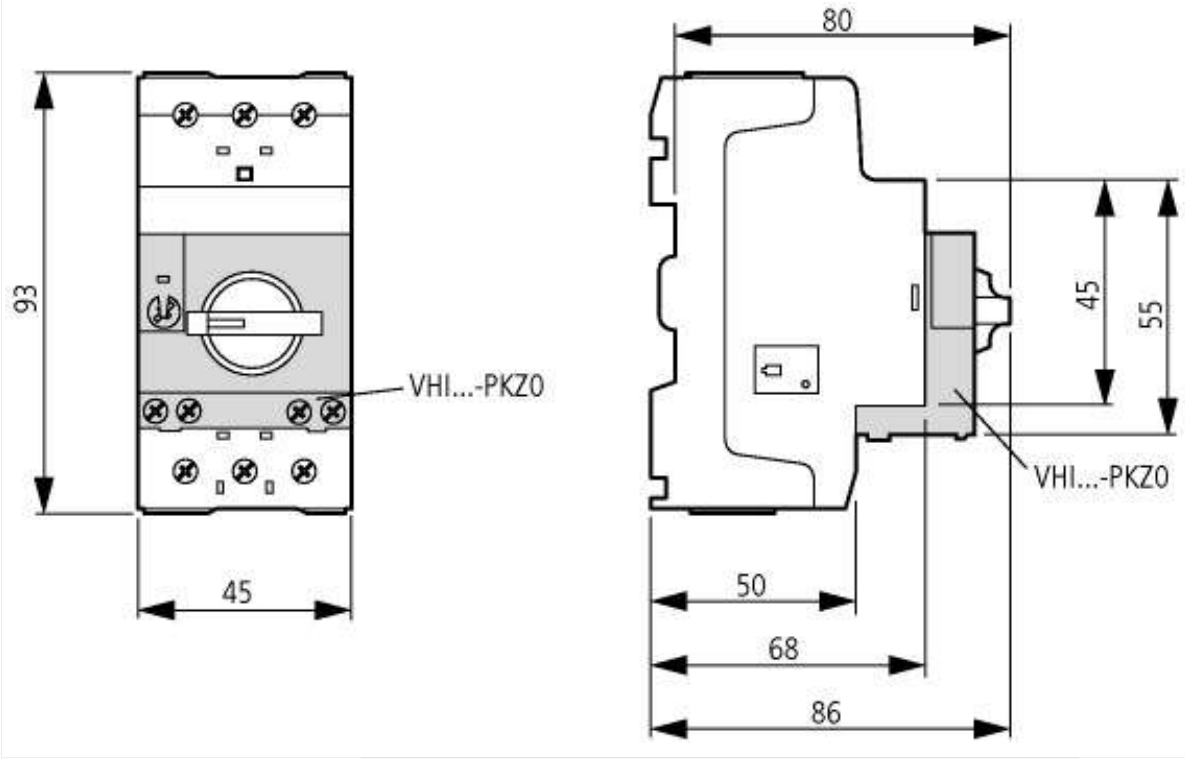

Motor-protective circuit-breakers with early-make auxiliary contacts
PKZM0-…+VHI-…-PKZ0

© 10/2020 by Eaton Industries GmbH