V03, V04, V05 (EXCEL32) 2/2 & 3/2 Direct solenoid actuated poppet valves



- Port size: G1/8, G1/4
- Extensive range of power and orifice size options
- Compact installation
- Removeable coil
- Standard exhaust diffuser
- Choice of manual override

Technical features

Medium:
Compressed air, filtered, lubricated and non lubricated
Operation:
Poppet valve, directly actuated spring return

Operating pressure:
16 bar (232 psi) maximum
Details see table below
Port sizes:
G 1/8, G 1/4 single valve
G 1/8 (on sub-base mounted)

Ambient/Media temperature:
-20 ... +50°C (-4 ... +122°F)
Air supply must be dry enough to avoid ice formation at temperatures below +2°C (+35°F).

Materials:
Coil: glass reinforced PA
Armature: stainless iron
Tube & spring: stainless steel
Base: zinc alloy (G1/8)
brass (G1/4), glass reinforced polyester (interface)
Seals: NBR (FPM)

Electrical details for solenoid operators

Voltage tolerance:	±10%	
Rating:	100% E.D.	
Power consumption:	Excel V03	d.c. 1,0 W
	Excel V04	d.c. 4,5 W
	Excel V05	d.c. 9,0 W
Inrush/hold:	Excel V03 & V04	a.c. 14/10 V A
	Excel V05	a.c. 27/20 V A

Electrical connection:	3 pin plug (DIN 43 650 Form A) Coil may be rotated at 90° intervals	
Manual override:	G1/8	Screwdriver operated, memory type standard
	G1/4	Lever operated memory type standard
	Interface	Screwdriver operated, memory type standard
Protection class:	IP 65 acc. to DIN EN 175 301-803 (DIN 40 050) with terminal box fitted	

Technical data - standard models

Symbol	Port size	Orifice (mm)	Actuation/return	Flow (l/min)	Operating pressure (bar)	(psi)	Weight (kg)	(lbs)	Drawing No.	Model
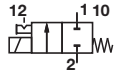	Flange	1	Solenoid/Spring	25	0 ... 10	0 ... 145	0,20	0.44	1	V03X286J-B613A*1)
	G1/8	1	Solenoid/Spring	30	0 ... 10	0 ... 145	0,24	0.52	2	V03A286J-B613A*1)
	Flange	2,5	Solenoid/Spring	150	0 ... 10	0 ... 145	0,20	0.44	1	V04X286M-B62*A
	G1/8	2,5	Solenoid/Spring	190	0 ... 10	0 ... 145	0,24	0.52	2	V04A286M-B62*A
	G1/4	2,5	Solenoid/Spring	190	0 ... 10	0 ... 145	0,32	0.70	3	V04B286M-B42*A
	G1/4	3	Solenoid/Spring	260	0 ... 7	0 ... 101	0,32	0.70	3	V04B286N-B42*A
	Flange	2,5	Solenoid/Spring	150	0 ... 16	0 ... 232	0,20	0.44	1	V05X286M-B63*A
	G1/8	2,5	Solenoid/Spring	190	0 ... 16	0 ... 232	0,24	0.52	2	V05A286M-B63*A
	G1/4	2,5	Solenoid/Spring	190	0 ... 16	0 ... 232	0,32	0.70	3	V05B286M-B43*A
	G1/4	3	Solenoid/Spring	260	0 ... 13	0 ... 188	0,32	0.70	3	V05B286N-B43*A
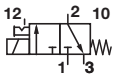	Flange	1	Solenoid/Spring	25	0 ... 10	0 ... 145	0,20	0.44	1	V03X486J-B613A*1)
	G1/8	1	Solenoid/Spring	30	0 ... 10	0 ... 145	0,24	0.52	2	V03A486J-B613A*1)
	Flange	2	Solenoid/Spring	95	0 ... 10	0 ... 145	0,20	0.44	1	V04X486L-B62*A
	G1/8	2	Solenoid/Spring	120	0 ... 10	0 ... 145	0,24	0.52	2	V04A486L-B62*A
	Flange	2,5	Solenoid/Spring	150	0 ... 10	0 ... 145	0,20	0.44	1	V05X486M-B63*A
	G1/8	2,5	Solenoid/Spring	190	0 ... 10	0 ... 145	0,24	0.52	2	V05A486M-B63*A
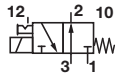	Flange	2	Solenoid/Spring	95	0 ... 10	0 ... 145	0,20	0.44	1	V04X386L-B62*A
	G1/8	2	Solenoid/Spring	120	0 ... 10	0 ... 145	0,24	0.52	2	V04A386L-B62*A
	Flange	2,5	Solenoid/Spring	150	0 ... 10	0 ... 145	0,20	0.44	1	V05X386M-B63*A
	G1/8	2,5	Solenoid/Spring	190	0 ... 10	0 ... 145	0,24	0.52	2	V05A386M-B63*A

* Insert voltage codes from table on page 2.
*1) V03 models are available with 24 V d.c. coil only. Spare coil part no. V03X286A-Q1213.
All models are available without manual override. Change 11th digit to 1 eg. V04A486L-B12*A.
Other orifices are available. Contact our Technical Service for details. Service kits are not available for these valves. Order connector plugs separately.

Our policy is one of continued research and development. We therefore reserve the right to amend, without notice, the specifications given in this document. (1998 - 5028d) © 2024 Norgren

Option selector

V0★★★86★-B★★★★

Series	Substitute
V03	3
V04	4
V05	5
Port size/base	**Substitute**
Interface	X
G1/8	A
G1/4	B
Function	**Substitute**
2/2 NC	2
3/2 NO	3
3/2 NC	4
Orifice (mm)	**Substitute**
1 (Interface only)	J
1,5 (Interface and G1/8 only)	K
2 (all versions)	L
2,5 (all versions)	M
3 (G1/4 only)	N

Connector	Substitute
Without (standard)	A
With	B
Voltage	**Substitute**
12 V d.c. (V04 & V05 only)	2
24 V d.c. (V03, V04 & V05)	3
24 V a.c. (V04 & V05 only)	4
48 V d.c. (V04 & V05 only)	5
48 V a.c. (V04 & V05 only)	6
110 V d.c. (V04 & V05 only)	7
110 V a.c. (V04 & V05 only)	8
240 V a.c. (V04 & V05 only)	9
Power	**Substitute**
1 W (V03)	1
4,5 W (V04)	2
9 W (V05)	3
Manual override	**Substitute**
Without	1
Lever	4
Push to turn (Screwdriver) Not available for G1/4	6

Note: This table should be used for identification purposes only and not to build up model variants.

Option selector Pneumatics only

V0★★★86★-Q11★★

Series	Substitute
V03	3
V04	4
V05	5
Port size/base	**Substitute**
Interface	X
G1/8	A
G1/4	B
Function	**Substitute**
2/2 NC	2
3/2 NO	3
3/2 NC	4
Orifice (mm)	**Substitute**
1 (Interface only)	J
1,5 (Interface and G1/8 only)	K
2 (all versions)	L
2,5 (all versions)	M
3 (G1/4 only)	N

Connector	Substitute
Without (standard)	A
With	B
Manual override	**Substitute**
Without	1
Lever	4
Push to turn (Screwdriver) Not available for G1/4	6

Note: This table should be used for identification purposes only and not to build up model variants.

Our policy is one of continued research and development. We therefore reserve the right to amend, without notice, the specifications given in this document. (1998 - 5028d) © 2024 Norgren

Valve and base options

Series	Interface mounted valve	G1/8 Valve	G1/4 Valve
			
V03	V03X	V03A	V03B
V04	V04X	V04A	V04B
V05	V05X	V05A	V05B

Voltage codes - V04 series

32 mm coil for connector interface acc. EN 175 301-803, form A

	Voltage	Power consumption Inrush/Hold	Model	Code
	12 V d.c.	4,5 W	V04X286A-Q1222	2
	24 V d.c.	4,5 W	V04X286A-Q1223	3
	48 V d.c.	4,5 W	V04X286A-Q1225	5
	110 V d.c.	4,5 W	V04X286A-Q1227	7
	24 V 50/60 Hz	14/10 VA	V04X286A-Q1224	4
	48 V 50/60 Hz	14/10 VA	V04X286A-Q1226	6
	110 ...120 V 50/60 Hz	14/10 VA	V04X286A-Q1228	8
	220 ... 240 V 50/60 Hz	14/10 VA	V04X286A-Q1229	9

Voltage codes - V05 series

32 mm coil for connector interface acc. EN 175 301-803, form A

	Voltage	Power consumption Inrush/Hold	Model	Code
	12 V d.c.	9 W	V05X286A-Q1232	2
	24 V d.c.	9 W	V05X286A-Q1233	3
	48 V d.c.	9 W	V05X286A-Q1235	5
	110 V d.c.	9 W	V05X286A-Q1237	7
	24 V 50/60 Hz	27/20 VA	V05X286A-Q1234	4
	48 V 50/60 Hz	27/20 VA	V05X286A-Q1236	6
	110 ...120 V 50/60 Hz	27/20 VA	V05X286A-Q1238	8
	220 ... 240 V 50/60 Hz	27/20 VA	V05X286A-Q1239	9

Connector plugs - ordered separately

30 mm, EN 175301-803 (DIN 43650 B) Form A
2-pole + PE



0570275

Interface valves, manifold only, manifold with valves

Series	Interface mounted Valve	Fixed length manifold only	Fixed length manifold with valves
			
V03	V03X	M/P35598/*2)	V03X..*3) 86..*4) -H613A..*2)
V04	V04X	M/P35598/*2)	VO4X..*3) 86..*4) -H62*A..*2)
V05	V05X	M/P35598/*2)	VO5X..*3) 86..*4) -H63*A..*2)

*2) Insert number of stations
*3) Insert function code
*4) Insert inlet orifice code

Interface mounted valves can be supplied pre-assembled on manifolds. Select the basic valve required and quote the associated manifold/valve assembly model using the table below:

Serie	Basic-Valve	Manifold valve
V03	V03X286J–B613A	V03X286J–H613A#
	V03X486J–B613A	V03X486J–H613A#
	V03X486K–B613A	V03X486K–H613A#
V04	VO4X286K–B62*A	VO4X286K–H62*A#
	VO4X286L–B62*A	VO4X286L–H62*A#
	VO4X286M–B62*A	VO4X286M–H62*A#
	VO4X486J–B62*A	VO4X486J–H62*A#
	VO4X486K–B62*A	VO4X486K–H62*A#
	VO4X486L–B62*A	VO4X486L–H62*A#
	VO4X486M–B62*A	VO4X486M–H62*A#
V05	VO5X286M–B61*A	VO5X286M–H63*A#
	VO5X486K–B61*A	VO5X486K–H63*A#
	VO5X486L–B61*A	VO5X486L–H63*A#
	VO5X486M–B61*A	VO5X486M–H63*A#

* Insert voltage code # Insert number of stations (1 to 20 stations)
1 = 1 station, 2 = 2 stations etc., A = 10 stations, B = 11 stations
K = 19 stations, L = 20 stations

Our policy is one of continued research and development. We therefore reserve the right to amend, without notice, the specifications given in this document. (1998 - 5028d) © 2024 Norgren

Old numbering reference bulletin

Old numbering	Description	Actual numbering
XL31021310/10P	2/2 N/C 2.5 G1/8 BASE SDMO 24VDC 4.5W	V04A286M-B623B
XL31021310/131P	2/2 N/C 2.5 G1/8 BASE SDMO 110VAC 10VA	V04A286M-B628B
XL31021310/81	2/2 N/C 2.5 G1/8 BASE SDMO 24VAC 10VA	V04A286M-B624A
XL32011011/10	3/2 N/C 1.0 I/F BASE SDMO 24VDC 4.5W	V04X486J-B623A
XL32011211/131P	3/2 N/C 2.0 I/F BASE SDMO 110VAC 10VA	V04X486L-B628B
XL32011211/81	3/2 N/C 2.0 I/F BASE SDMO 24VAC 10VA	V04X486L-B624A
XL32011311/10	3/2 N/C 2.5 I/F BASE SDMO 24VDC 4.5W	V04X486M-B623A
XL32013211/10	3/2 N/C 2.0 I/F BASE LEVER 24VDC 4.5W	V04X486L-B423A
XL32020211/10	3/2 N/C 2.0 G1/8 BASE NOMO 24VDC 4.5W	V04A486L-B123A
XL32020211/137	3/2 N/C 2.0 G1/8 BASE NOMO 230VAC 10VA	V04A486L-B129A
XL32021111/10	3/2 N/C 1.5 G1/8 BASE SDMO 24VDC 4.5W	V04A486K-B623A
XL32021211/131P	3/2 N/C 2.0 G1/8 BASE SDMO 110VAC 10VA	V04A486L-B628B
XL32021211/137P	3/2 N/C 2.0 G1/8 BASE SDMO 230VAC 10VA	V04A486L-B629B
XL32030211/10	3/2 N/C 2.0 G1/4 BASE NOMO 24VDC 4.5W	V04B486L-B123A
XL32033211/10	3/2 N/C 2.0 G1/4 BASE LEVER 24VDC 4.5W	V04B486L-B423A
XL32033311/10P	3/2 N/C 2.5 G1/8 BASE LEVER 24VDC 4.5W	V04A486M-B423B
XL32041211/131	3/2 N/C 2.0 CNOMO BASE SDMO 110VAC 10VA	V04Y486L-B628A
XL32041311/10	3/2 N/C 2.5 CNOMO BASE SDMO 24VDC 4.5W	V04Y486M-B623A
XL33011310/10P	3/2 N/O 2.5 I/F BASE SDMO 24VDC 4.5W	V04X386M-B623B
XL33021210/81P	3/2 N/O 2.0 G1/8 BASE SDMO 24VAC 10VA	V04A386L-B624B
XL33023210/10	3/2 N/O 2.0 G1/8 BASE LEVER 24VDC 4.5W	V04A386L-B423A
XL33120310/10	3/2 N/O 2.5 G1/8 BASE NOMO 24VDC 4.5W	V04A386M-B123A
XL51021310/81	2/2 N/C 2.5 G1/8 BASE SDMO 24VAC 10VA	V05A286M-B634A
XL52010311/10	3/2 N/C 2.5 I/F BASE NOMO 24VDC 9.0W	V05X486M-B133A
XL52011211/16	3/2 N/C 2.0 I/F BASE SDMO 12VDC 9.0W	V05X486L-B632A
XL52011311/131	3/2 N/C 2.5 I/F BASE SDMO 110VAC 20VA	V05X486M-B638A
XL52013311/10P	3/2 N/C 2.5 I/F BASE LEVER 24VDC 9W	V05X486M-B433B
XL52021211/10P	3/2 N/C 2.0 G1/8 BASE SDMO 24VDC 9.0W	V05A486L-B633B
XL52021311/16	3/2 N/C 2.5 G1/8 BASE SDMO 12VDC 9.0W	V05A486M-B632A
XL52021311/61	3/2 N/C 2.5 G1/8 BASE SDMO 48VDC 4.5W	V05A486M-B636A
XL52023211/10	3/2 N/C 2.0 G1/8 BASE LEVER 24VDC 9.0W	V05A486L-B433A
XL52033211/131	3/2 N/C 2.0 G1/4 BASE LEVER 110VAC 20VA	V05B486L-B438A
XL52033311/131	3/2 N/C 2.5 G1/4 BASE LEVER 110VAC 20VA	V05B486M-B438A
XL52111311/137	3/2 N/C 2.5 I/F BASE SDMO 230VAC 20VA	V05X486M-B639A
XL53011210/10	3/2 N/O 2.0 I/F BASE SDMO 24VDC 9.0W	V05X386L-B633A
XL53011310/137	3/2 N/O 2.5 I/F BASE SDMO 230VAC 20VA	V05X386M-B639A
XL53023310/137	3/2 N/O 2.5 G1/8 BASE LEVER 230VAC 20VA	V05A386M-B439A
XL53033310/10	3/2 N/O 2.5 G1/4 BASE LEVER 24VDC 9.0W	V05B386M-B433A

Our policy is one of continued research and development. We therefore reserve the right to amend, without notice, the specifications given in this document. (1998 - 5028d) © 2024 Norgren

Drawings

Dimensions in mm
Projection/First angle

V03X, V04X and V05X models
Interface mounted valves

1

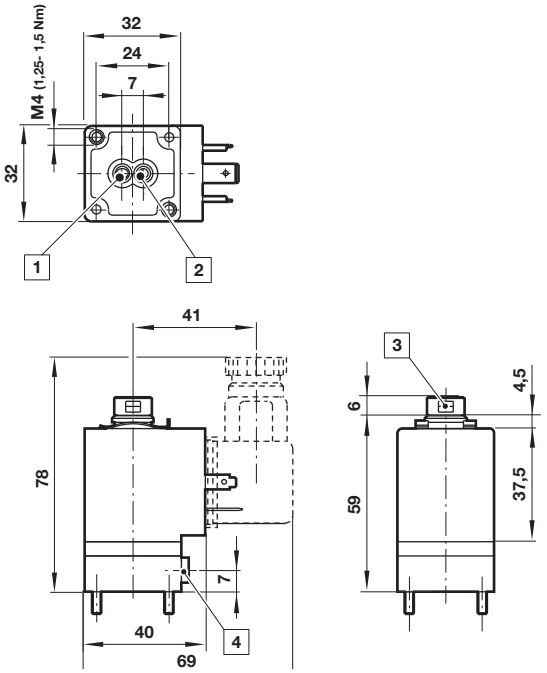

V03A, V04A and V05A models
G1/8 valves

2

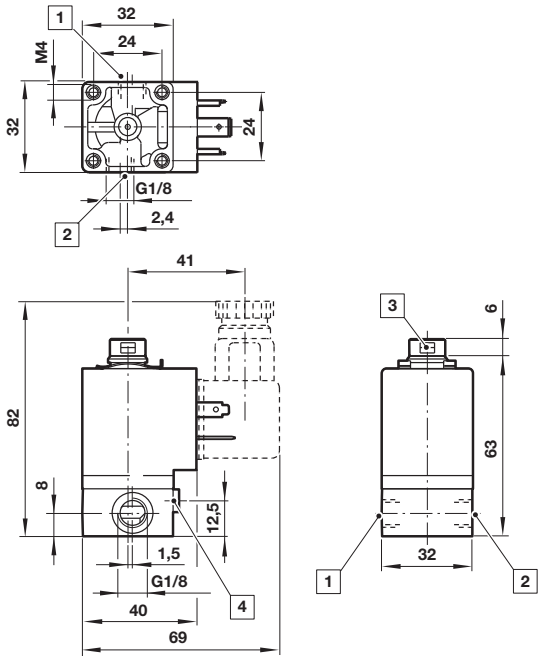

1 Inlet port
2 Outlet port
3 Port 3 (G1/8) Max. fitting torque: 10 Nm (not applicable with diffuser)
4 Manual override

V03B, V04B and V05B models
G1/4 valves

3

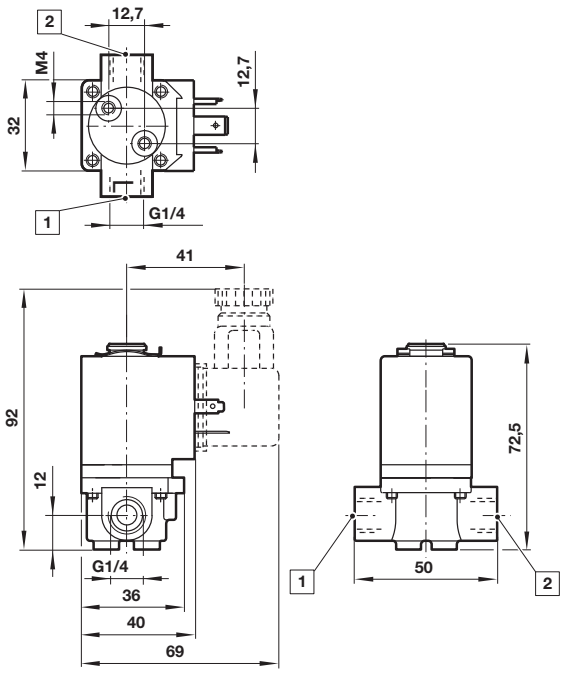

Our policy is one of continued research and development. We therefore reserve the right to amend, without notice, the specifications given in this document. (1998 - 5028d) © 2024 Norgren

Manifold
M/P35598/*

Dimensions in mm
Projection/First angle

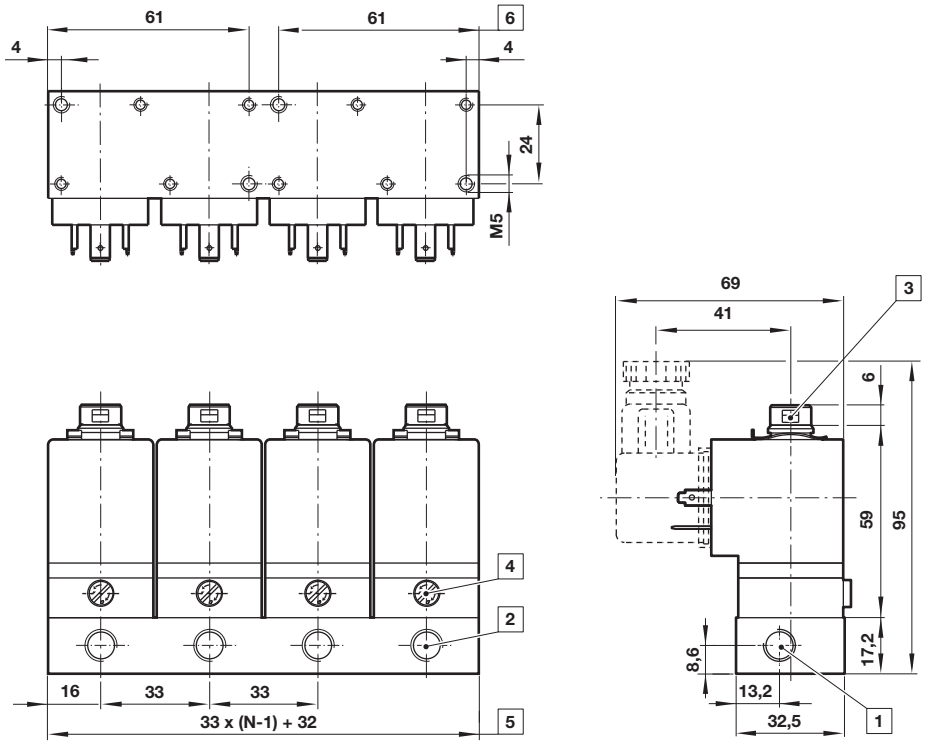

1 Inlet port, G1/8 x 10 deep
2 Outlet port, G1/8 x 9,5 deep
3 Port 3 (G1/8) Max. fitting torque: 10 Nm (not applicable with diffuser)
4 Manual override
5 N = number of stations
6 Two additional threads with five or more stations

Warning

These products are intended for use in industrial compressed air systems only. Do not use these products where pressures and temperatures can exceed those listed under »**Technical features/data**«. Before using these products with fluids other than those specified, for non-industrial applications, life-support systems or other applications not within published specifications,
consult Norgren.
Through misuse, age, or malfunction, components used in fluid power systems can fail in various modes.

The system designer is warned to consider the failure modes of all component parts used in fluid power systems and to provide adequate safeguards to prevent personal injury or damage to equipment in the event of such failure.
System designers must provide a warning to end users in the system instructional manual if protection against a failure mode cannot be adequately provided.
System designers and end users are cautioned to review specific warnings found in instruction sheets packed and shipped with these products.

Our policy is one of continued research and development. We therefore reserve the right to amend, without notice, the specifications given in this document. (1998 - 5028d) © 2024 Norgren