

BB Series



BB-1K-K Series



BB-2K-K Series



BB-2GD Series



BB-2GD 1K-K Series

General Information of Installation and Usage for BB Series Cam Clutch / One-Way Bearing

1. BB Series Cam Clutches are designed for press fit installation.
2. Keyways except BB25 are manufactured according to DIN6885.3. BB40-1K-K and BB40-2GD 1K-K are manufactured according to DIN6885.1.
3. BB-2K-K Series have keyways on inner- and outer race. Inner race keys for 1K-K and 2K-K Cam Clutches are included.
4. Correct interference dimensions on shaft and housing must be maintained to obtain maximum bearing and clutch performance.
5. Refer to the table on next page for shaft- and housing tolerances.
6. BB-2GD and BB-2GD 1K-K Cam Clutches have special lip seals for the effective protection against dust and splash water.
7. The arrow on the inner race shows the direction of inner race engagement.
8. For installation of the clutch use a press tool with an appropriate diameter to ensure even pressure over the entire surface of inner and outer race.
9. Never use a hammer or apply any other shock load to the clutch.
10. Make sure that the housing has enough strength to withstand the pressure required for the press fit installation of the clutch.
11. Operating temperature range: -30°C to +100°C (Consult Tsubaki for temperatures which exceed this range).

Lubrication

1. BB Series Cam Clutches are pre-lubricated with special grease and do not need any maintenance or additional grease before use.
2. If the clutch is used with an oil lubricant, the oil must be applied on the inside of the clutch as well.
3. Never use oil or any other lubricant containing EP additives.

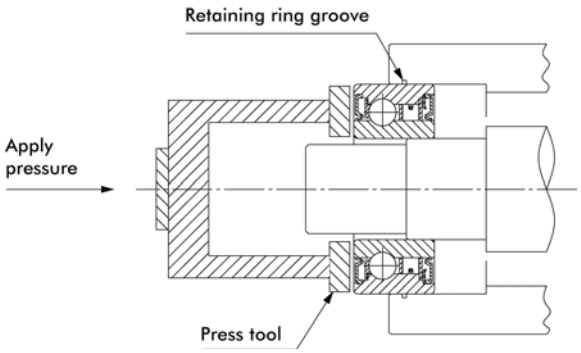

Note:
The indication "K" on the inner race of a clutch is applied for both types 1K as well as 2K

BB SERIES CAM CLUTCH

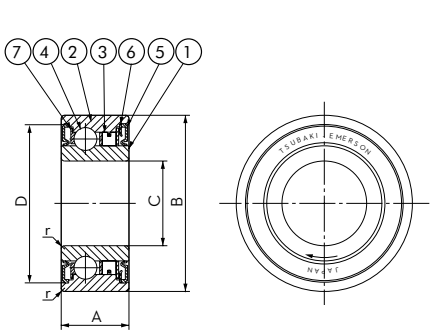

① Inner race
② Outer race
③ Cam cage
④ Ball bearing
⑤ Seal
⑥ Side plate
⑦ Retainer

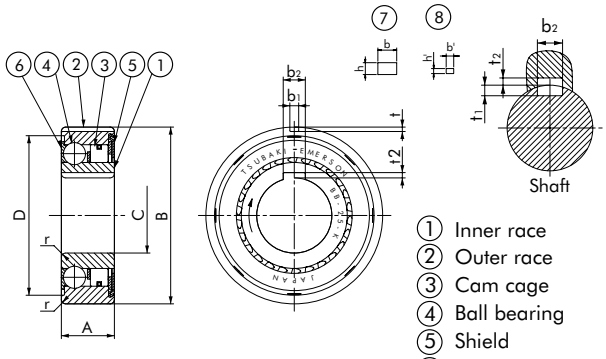

① Inner race
② Outer race
③ Cam cage
④ Ball bearing
⑤ Shield
⑥ Retainer
⑦ Key for inner race
⑧ Key for outer race

BB, BB-1K-K, BB-2K-K, BB-2GD, BB-2GD 1K-K

Dimensions in mm

Model	Torque Capacity Nm	Max. Overrunning Speed		Drag Torque Nm		A		B	C	D		r	Bearing Loads		Approx. Mass g/pc	
		Inner Race r/min	Outer Race r/min	BB BB-1K-K BB-2K-K	BB-2GD BB-2GD 1K-K	BB BB-1K-K BB-2K-K	BB-2GD BB-2GD 1K-K			BB BB-1K-K BB-2K-K	BB-2GD BB-2GD 1K-K		C N	Co N	BB BB-1K-K BB-2K-K	BB-2GD BB-2GD 1K-K
BB15	29	3600	2000	0.010	0.040	11	16	35	15	32.6	32.45	0.6	5950	3230	50	70
BB17	43	3500	1900	0.010	0.050	12	17	40	17	36.1	36.45	0.6	7000	3700	80	100
BB20	61	3000	1600	0.014	0.055	14	19	47	20	41.7	42.35	1.0	8500	4900	120	150
BB25	78	2500	1400	0.017	0.055	15	20	52	25	47.1	47.05	1.0	10700	6300	150	200
BB30	140	2000	1100	0.030	0.058	16	21	62	30	56.6	55.60	1.0	11900	7900	230	280
BB35	173	1800	1000	0.034	0.060	17	22	72	35	64.0	64.60	1.1	13500	9700	320	410
BB40	260	1800	900	0.040	0.080	22	27	80	40	71.0	71.60	1.1	14500	11700	400	600

Model		Shaft Diameter	Housing Diameter
BB15	BB15-2GD	15 +0.023 +0.012	35 -0.012 -0.028
BB17	BB17-2GD	17 +0.023 +0.012	40 -0.012 -0.028
BB20	BB20-2GD	20 +0.028 +0.015	47 -0.012 -0.028
BB25	BB25-2GD	25 +0.028 +0.015	52 -0.014 -0.033
BB30	BB30-2GD	30 +0.028 +0.015	62 -0.014 -0.033
BB35	BB35-2GD	35 +0.033 +0.017	72 -0.014 -0.033
BB40	BB40-2GD	40 +0.033 +0.017	80 -0.014 -0.033

Model		Shaft Diameter	Housing Diameter
BB15-1K-K	BB15-2GD 1K-K	15 -0.008 -0.028	35 -0.012 -0.028
BB17-1K-K	BB17-2GD 1K-K	17 -0.008 -0.028	40 -0.012 -0.028
BB20-1K-K	BB20-2GD 1K-K	20 -0.010 -0.031	47 -0.012 -0.028
BB25-1K-K	BB25-2GD 1K-K	25 -0.010 -0.031	52 -0.014 -0.033
BB30-1K-K	BB30-2GD 1K-K	30 -0.010 -0.031	62 -0.014 -0.033
BB35-1K-K	BB35-2GD 1K-K	35 -0.012 -0.037	72 -0.014 -0.033
BB40-1K-K	BB40-2GD 1K-K	40 -0.012 -0.037	80 -0.014 -0.033

Model	Shaft Diameter	Housing Diameter
BB15-2K-K	15 -0.008 -0.028	35 -0.002 -0.018
BB17-2K-K	17 -0.008 -0.028	40 -0.002 -0.018
BB20-2K-K	20 -0.010 -0.031	47 -0.003 -0.022
BB25-2K-K	25 -0.010 -0.031	52 -0.003 -0.022
BB30-2K-K	30 -0.010 -0.031	62 -0.003 -0.022
BB35-2K-K	35 -0.012 -0.037	72 -0.006 -0.025
BB40-2K-K	40 -0.012 -0.037	80 -0.006 -0.025

Model		Keyway					Inner Race Key b x h x length	Outer Race Key b' x h' x length
		b_2 js10	t_1	t_2	b_1 js9	t		
BB15-1K-K	BB15-2GD 1K-K	5.0	1.9	1.2	-	-	5 x 3 x 11	-
BB15-2K-K	-				2.0	0.6		2 x 2 x 11
BB17-1K-K	BB17-2GD 1K-K	5.0	1.9	1.2	-	-	5 x 3 x 12	-
BB17-2K-K	-				2.0	1.0		2 x 2 x 12
BB20-1K-K	BB20-2GD 1K-K	6.0	2.5	1.6	-	-	6 x 4 x 14	-
BB20-2K-K	-				3.0	1.5		3 x 3 x 14
BB25-1K-K	BB25-2GD 1K-K	8.0	3.6	1.5	-	-	8 x 5 x 15	-
BB25-2K-K	-				6.0	2.0		6 x 4 x 15
BB30-1K-K	BB30-2GD 1K-K	8.0	3.1	2.0	-	-	8 x 5 x 16	-
BB30-2K-K	-				6.0	2.0		6 x 4 x 16
BB35-1K-K	BB35-2GD 1K-K	10.0	3.7	2.4	-	-	10 x 6 x 17	-
BB35-2K-K	-				8.0	2.5		8 x 5 x 17
BB40-1K-K	BB40-2GD 1K-K	12.0	5.0	3.3	-	-	12 x 8 x 22	-
BB40-2K-K	-				10.0	3.0		10 x 6 x 22

Note:

For BB25-1K-K, BB25-2K-K and BB25-2GD 1K-K the dimension of t2 is 0.5 mm shallower than DIN 6885.3. To use a DIN standard key, process the keyway 0.5 mm deeper on the shaft than according to DIN standard. All other models are dimensionally interchangeable.