APEM



ULTRAMEC™

mec
switches

ultramec™

ultramec™ 6C



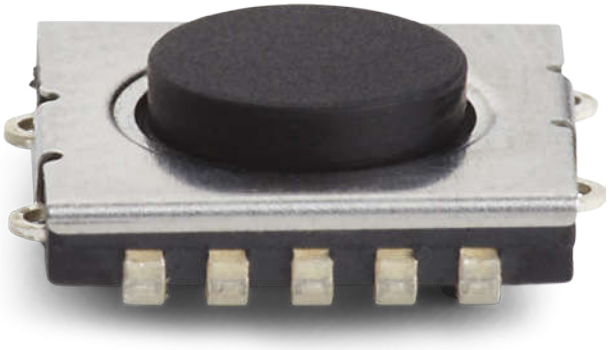



PANEL MOUNTED SWITCHES | PCB MOUNTED SWITCHES | JOYSTICKS | SWITCH PANELS | LED INDICATORS

NEW SWITCH

HIGHLY RELIABLE TACTILE SWITCH

- IP67 sealing
- 3.000.000 cycles
- Dimensions 8x8mm
- Low profile h=2,5mm
- Crisp sound and feel
- Pins for accurate positioning
- Excellent for under overlay and custom caps
- Good when space is limited
- New cap 10G Ø11.5mm in 5 solid colours
- 6C+10G lowest solution in MEC range h=4,9mm
- Floating cap- easy alignment of PCB and front panel
- Soft actuator: no rattling from the cap when application gets shaken

ultramec™

ultramec™ 6C + 10G



- Low profile h=2.5 mm
- Dimensions: 8 x 8 mm
- IP67 sealing
- Temp. Range: -40/+85°C
- Lifetime: 3,000,000 cycles
- Actuation force: 3.7N +/- 0.7N

- Cap series:
- Round
- Ø11.5 mm
- Concave
- Total height: 4.9 mm

All dimensions in mm. Tolerances +/- 0.2 mm.

DIMENSIONS

Switch 6C

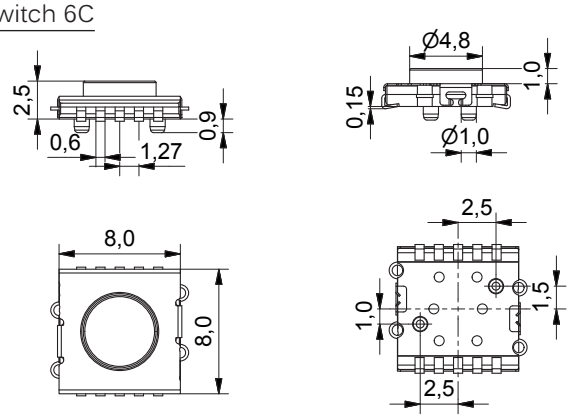

6C+10G

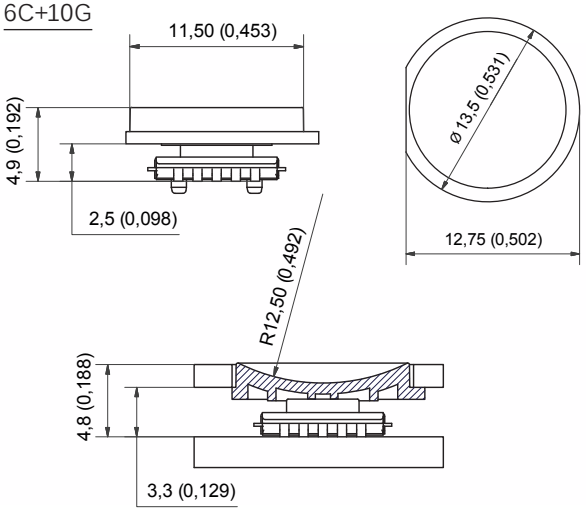

PCB LAYOUT & CIRCUIT DIAGRAM

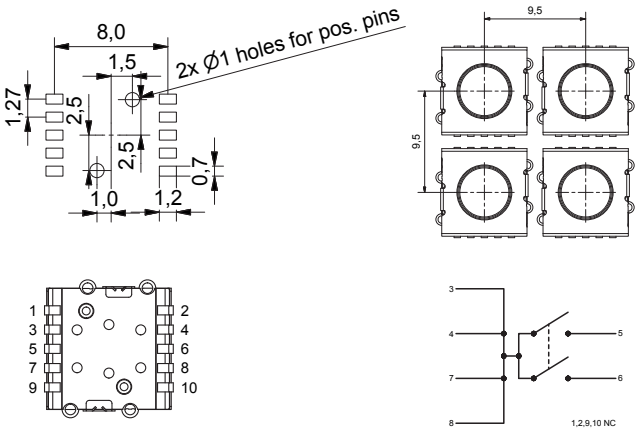

PACKAGING

Tape & Reel

- Tape width: 16
- Pitch: 12
- Reel: Ø330mm
- Quantity per reel: 1000 pcs
- MOQ: 1/2 reel 500 pcs

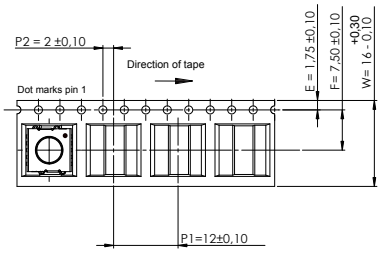

HOW TO ORDER

Switch	Mounting	Poles	Function	Positioning pins	Packaging		Cap	Colour code
6 C	☐	☐	☐☐	☐	☐	+	☐☐☐	☐☐
	J j-bend	**1** single pole	**NO** normally open	**P** positioning pins *optional	**R** tape & reel		**10G**	**00** blue **03** grey **08** red **09** black **36** signal white

Ordering example: 6CJ1NOPR + 10G09 or 6CJ1NOR

Specifications subject to changes. Please see updates of products and changes of specifications on www.mec.dk



ultramec™ 6C

ELECTRICAL SPECIFICATIONS	
Contact resistance	<50mΩ
Insulation resistance	>10MΩ
Recommended resistive load	0,5-50mA 24VDC
Contact bounce	<2ms
Dielectric strength	250V

TEMPERATURE RANGE	
Operating temperature	-40/+85°C
Storage temperature	-40/+85°C
SOLDERING (SMD)	JEDEC J-STD-020C
Sealing IEC 529	IP67

MECHANICAL SPECIFICATIONS	
Standard actuation force:	
Before soldering:	4.2N +/- 1.0N
After soldering:	3.7N +/- 0.7N
Max. actuation force	100N for 10 sec
Key travel	0.3mm +/- 0.15mm
Lifetime	3.000.000 cycles

MATERIAL SPECIFICATIONS - SWITCHES	
Housing	PPS
Actuator	Silicon
Contact dome	Stainless steel
Fixed contacts	CuZn +1µNi + 4µAg
Terminals	CuZn +1µNi

THIS IS JUST THE BEGINNING

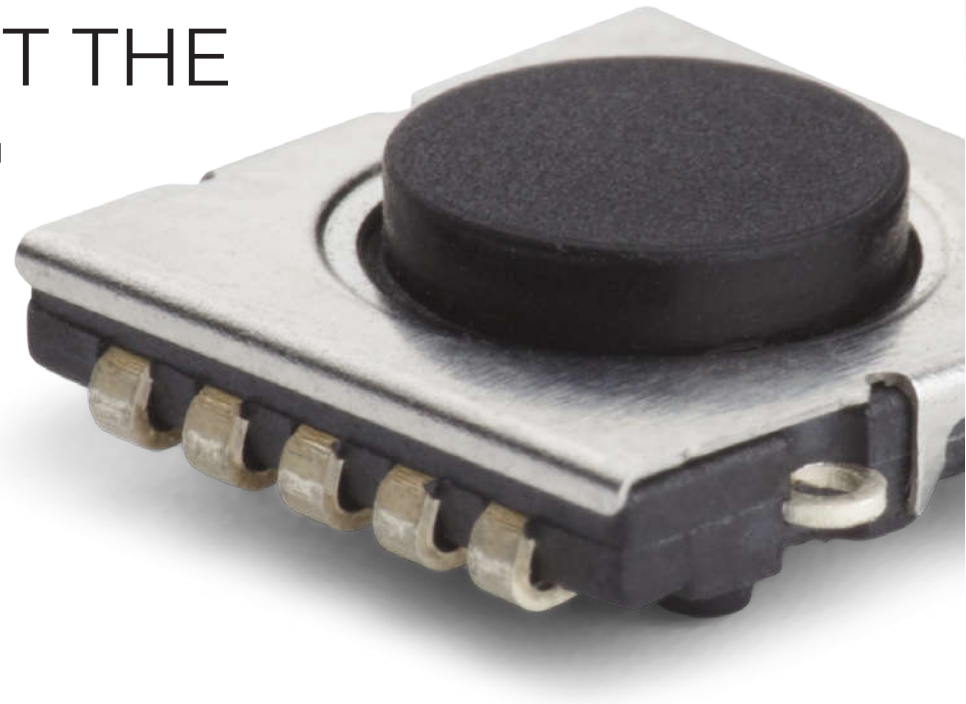

PANEL MOUNTED SWITCHES | PCB MOUNTED SWITCHES | JOYSTICKS | SWITCH PANELS | LED INDICATORS

NEW SWITCH FAMILY

ULTRAMEC™ MEANS MODULARITY

Ultramec™ is a whole new switch family designed and produced by MEC Switches in Denmark. The low profile 6C is just the first one out of the pipeline.

ONE FOOTPRINT, MANY FUNCTIONS

The keyword for the new switch family is modularity. Different versions of ultramec use the same number of terminals and the same bottom part of the housing, it is the top parts that define the height, function and options available.

FUTURE OPTIONS

The ten terminals are designed to adapt to evolving requirements, such as illumination including RGB option as well as NC/NO and double pole function.

The future versions of Ultramec™ will be 5G series snap-action caps.

Only J-bend terminals are offered as a standard option.

WORLDWIDE SALES & CUSTOMER SUPPORT

AMERICAS



USA
63 Neck Road
HAVERHILL, MA 01835
Tel: (+1) 978 372 1602
Fax: (+1) 978 372 3534
info@apem.com

USA
970 Park Center Drive
VISTA, CA 92081
Tel: (+1) 760 598 2518
Fax: (+1) 760 598 2524
info@apem.com

EMEA



BENELUX
Avenue Excelsiorlaan 21
1930 ZAVENTEM
Belgium
Tel B: (+32) 27 25 05 00
Tel NL: (+31) (70) 799 91 51
Fax: (+32) 27 25 22 00
sales@apemswitches.be

FRANCE
55, avenue Edouard Herriot
BP1
82303 CAUSSADE Cedex
Tel: (+33) 5 63 93 14 98
Fax: (+33) 5 63 93 19 03
commercial@apem.fr

GERMANY
Gewerbehof Giesing
Paulsdorfferstr. 34, 2. OG
D-81549 MUNICH
Tel: (+49) 89 45 99 11 0
Fax: (+49) 89 48 10 39
info@apem.de

ITALY
Via Marconi 147G
12030 MARENE (CN)
Tel: (+39) 0172 74 31 70
Fax: (+39) 0172 74 31 71
apem.italia@apem.it

SWEDEN
Isafjordsgatan 35
S-16440 KISTA
Tel: (+46) 8 626 38 00
Fax: (+46) 8 626 82 49
info@apem.se

UNITED KINGDOM
Drakes Drive
LONG CRENDON, Bucks HP18 9BA
England
Tel: (+44) 1 844 202400
Fax: (+44) 1 844 202500
sales@apem.co.uk

DENMARK
MEC
Industriparken 23
2750 BALLERUP
Tel: (+45) 44 97 33 66
Fax: (+45) 44 68 15 14
danmec@mec.dk

ASIAPAC



CHINA
RongGuang Building, 602A
11, Changshun Road
200051 SHANGHAI
Tel: (+86) 21 6278 8546,
(+86) 21 6278 6872
Fax: (+86) 21 6208 8209
contact@apem.com.cn

MORE THAN 130 DISTRIBUTORS WORLDWIDE
(Complete list available on www.apem.com)

APEM RESERVES THE RIGHT TO AMEND SPECIFICATIONS WITHOUT NOTICE

Mouser Electronics

Authorized Distributor

Click to View Pricing, Inventory, Delivery & Lifecycle Information:

Apem:

10G00 10G08 10G36 10G09 6CJ1N0PR 10G03