Data sheet

Three-phase monitoring relay
CM-PVE

The three-phase monitoring relay CM-PVE monitors the phase parameter phase failure as well as over- and undervoltage in three-phase mains.



Characteristics

- Monitoring of three-phase mains for phase failure, over- and undervoltage
- With or without neutral monitoring
- Device with neutral monitoring can also be used to monitor single-phase mains
- Powered by the measuring circuit
- 1 n/o contact
- 25 mm (0.89 in) width
- 1 LED for the indication of operational states

Approvals

- UL 508, CAN/CSA C22.2 No.14
- EAC
- CB scheme
- CCC
- RMRS

Marks

- CE
- C-Tick

Order data

Three-phase monitoring relays

Type	Rated control supply voltage = measuring voltage	Neutral monitoring	Order code
CM-PVE	3 x 320-460 V AC, 185-265 V AC	yes	1SVR550870R9400
CM-PVE	3 x 320-460 V AC	no	1SVR550871R9500

Functions

Operating controls



1 Indication of operational states

R: yellow LED – Relay status

Application / operating mode

The CM-PVE is designed for use in three-phase mains for monitoring the phase parameter phase failure as well as over- and undervoltage. The CM-PVE with neutral monitoring is also suitable for monitoring single phase mains. For this, all three external conductors (L1, L2, L3) have to be jumpered and connected as one single conductor.

The CM-PVE works according to the closed-circuit principle.

Indication of operational states

LEDs, status information and fault messages

Operational state	R: LED yellow
Output relay energized	⎍

Function descriptions / diagrams

Phase failure monitoring

Applying control supply voltage begins the fixed start-up delay t_S. When t_S is complete and all phases are present with correct voltage, the output relay energizes and the yellow LED R glows. If a phase failure occurs, the output relay de-energizes instantaneously and the LED R turns off.

As soon as the voltage returns to the tolerance range t_S starts again. After t_S is complete, the output relay re-energizes automatically and the LED R glows.

Over- and undervoltage monitoring

Applying control supply voltage begins the fixed start-up delay t_S. When t_S is complete and all phases are present with correct voltage, the output relay energizes and the LED R glows.

If the voltage to be monitored exceeds or falls below the fixed threshold value, the output relay de-energizes after the fixed tripping delay t_V is complete and the LED R turns off.

As soon as the voltage returns to the tolerance range, taking into account a fixed hysteresis of 5 %, t_S starts again. After t_S is complete, the output relay re-energizes automatically and the LED R glows.

CM-PVE with neutral monitoring

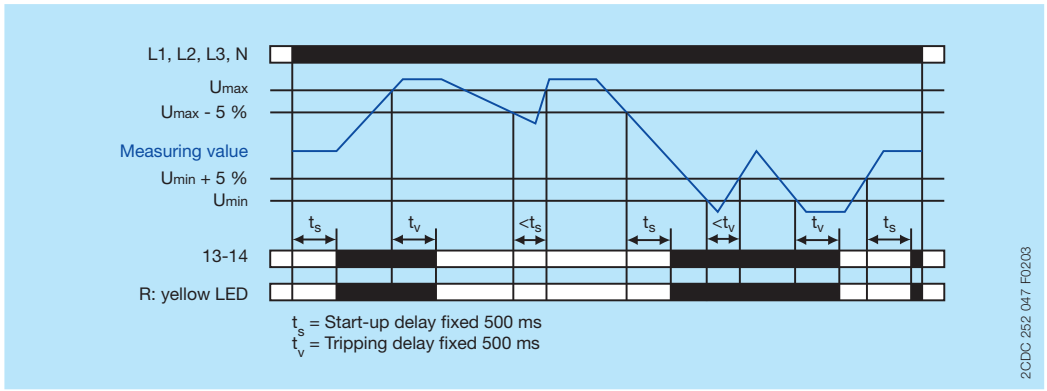

CM-PVE without neutral monitoring

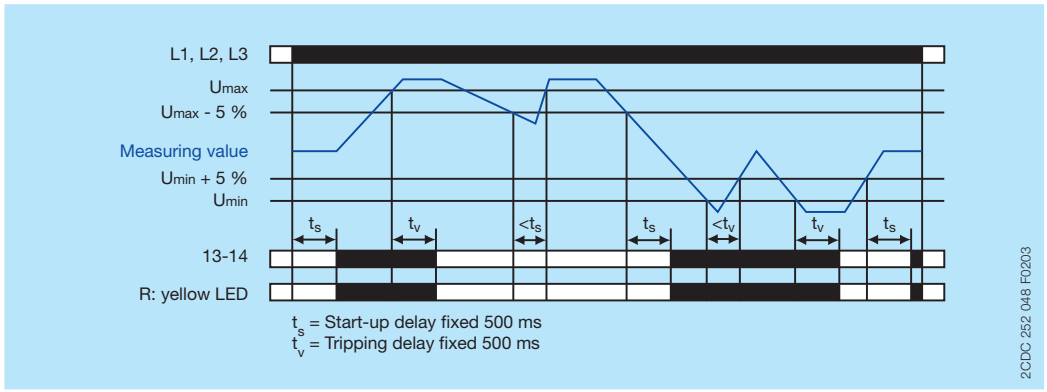

Electrical connection

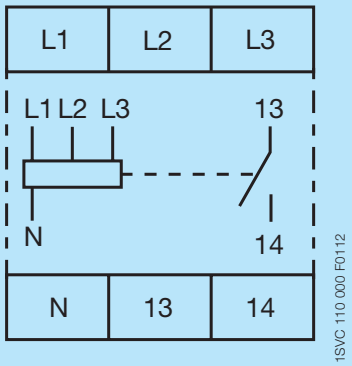

Connection diagram CM-PVE with neutral monitoring

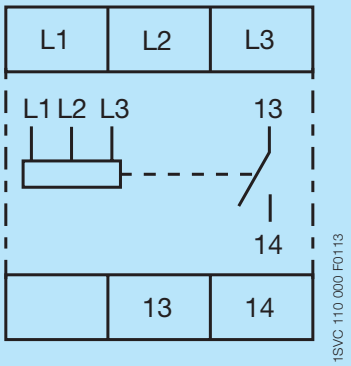

Connection diagram CM-PVE without neutral monitoring

L1, L2, L3, (N)	Control supply voltage = measuring voltage
13-14	Output contact - closed-circuit principle

Technical data

Data at T_a = 25 °C and rated values, unless otherwise indicated

Input circuits

Type	**CM-PVE** [1]	**CM-PVE**
Supply circuit = measuring circuit	**L1, L2, L3, N**	**L1, L2, L3**
Rated control supply voltage U_s = measuring voltage	3 x 320-460 V AC, 185-265 V AC	3 x 320-460 V AC
Rated control supply voltage U_s tolerance	-15...+10 %	
Rated frequency	50/60 Hz (-10...+10 %)	

[1] Device with neutral monitoring: The external conductor voltage towards the neutral conductor is measured.

Measuring circuit		**L1, L2, L3, N**	**L1, L2, L3**
Monitoring functions	Phase failure	■	■
	Over- / undervoltage	■	■
	Interrupted neutral	■	-
Measuring ranges		3 x 320-460 V AC, 185-265 V AC	3 x 320-460 V AC
Thresholds	U_{min}	fixed 185 V / 320 V	fixed 320 V
	U_{max}	fixed 265 V / 460 V	fixed 460 V
Hysteresis related to the threshold value		fixed 5 %	
Rated frequency of the measuring signal		50/60 Hz (-10...+10 %)	
Response time		80 m	
Accuracy within the temperature range		$\Delta U \leq 0.06$ % / °C	

Timing circuit	
Start-up delay T_s	fixed 500 ms (±20 %)
Tripping delay T_v	at over-/undervoltage fixed 500 ms (±20 %)

User interface

Indication of operational states		
Relay status	R	yellow LED

Details see table ‚LEDs, status information and fault messages' on page 2 and ‚Function descriptions / diagrams' on page 3.

Output circuits

Kind of output	13-14	relay, 1 n/o contact
Operating principle		closed-circuit principle [2]
Contact material		AgCdO
Rated operational voltage U_e (IEC/EN 60947-1)		250 V
Minimum switching voltage / Minimum switching current		250 V DC, 250 V AC
Rated operational current I_e (IEC/EN 60947-5-1)	AC12 (resistive) at 230 V	4 A
	AC15 (inductive) at 230 V	3 A
	DC12 (resistive) at 24 V	4 A
	DC13 (inductive) at 24 V	2 A
AC rating (UL 508)	Utilization category (Control Circuit Rating Code)	B 300
	max. rated operational voltage	300 V AC
	max. continuous thermal current at B 300	5 A
	max. making/breaking apparent power at B 300	3600/360 VA
Mechanical lifetime		30 x 10^6 switching cycles
Electrical lifetime	AC12, 230 V, 4 A	0.1 x 10^6 switching cycles
Maximum fuse rating to achieve short-circuit protection	n/c contact	10 A fast-acting
	n/o contact	10 A fast-acting

[2] Closed-circuit principle: Output relay is de-energized if the measured value exceeds/drops below the adjusted threshold.

General data

MTBF			on request
Duty time			100 %
Dimensions (W x H x D)		product dimensions	22.5 x 78 x 78.5 mm (0.89 x 3.07 x 3.09 in)
		packaging dimensions	24 x 83 x 25 mm (0.94 x 3.27 x 0.98 in)
Weight	net weight	1SVR 550 870 R9400	0.069 kg (0.152 lb)
		1SVR 550 871 R9500	0.066 kg (0.146 lb)
	gross weight	1SVR 550 870 R9400	0.080 kg (0.176 lb)
		1SVR 550 871 R9500	0.078 kg (0.172 lb)
Mounting			DIN rail (IEC/EN 60715)
Mounting position			any
Degree of protection		housing	IP50
		terminals	IP20

Electrical connection

Wire size	fine-strand with wire end ferrule	2 x 0.75-1.5 mm² (2 x 18-16 AWG)
	fine-strand without wire end ferrule	2 x 1-1.5 mm² (2 x 18-16 AWG)
	rigid	2 x 0.75-1.5 mm² (2 x 18-16 AWG)
Stripping length		10 mm (0.39 in)
Tightening torque		0.6 - 0.8 Nm (5.31 - 7.08 lb.in)

Environmental data

Ambient temperature ranges	operation	-20...+60 °C
	storage	-40...+85 °C
Damp heat, cyclic (IEC 60068-2-30)		24 h cycle time, 55 °C, 93 % rel., 96 h
Operational reliability (IEC 68-2-6)		6 g
Mechanical resistance (IEC 68-2-6)		10 g

Isolation data

Rated insulation voltage U_i (VDE 0110, IEC/EN 60947-1)	supply circuit / measuring circuit / output circuit	400 V
Rated impulse withstand voltage U_{imp} (VDE 0110, IEC/EN 60664)	all isolated circuits	4 kV, 1.2/50 µs
Test voltage between all isolated circuits (routine test)		2.5 kV, 50 Hz, 1 min.
Pollution degree (VDE 0110, IEC/EN 60664, IEC/EN 60255-5)		3
Overvoltage category (VDE 0110, IEC/EN 60664, IEC/EN 60255-5)		III

Standards

Product standard	IEC/EN 60255-6
Low Voltage Directive	2006/95/EC
EMC directive	2004/108/EC

Electromagnetic compatibility

Interference immunity to		IEC/EN 61000-6-2
electrostatic discharge	IEC/EN 61000-4-2	Level 3 (6 kV / 8 kV)
radiated, radio-frequency, electromagnetic field	IEC/EN 61000-4-3	Level 3 (10 V/m)
electrical fast transient / burst	IEC/EN 61000-4-4	Level 3 (2 kV / 5 kHz)
surge	IEC/EN 61000-4-5	Level 4 (2 kV L-L)
conducted disturbances, induced by radio-frequency fields	IEC/EN 61000-4-6	Level 3 (10 V)
Interference emission		IEC/EN 61000-6-4

Technical diagrams

Load limit curves

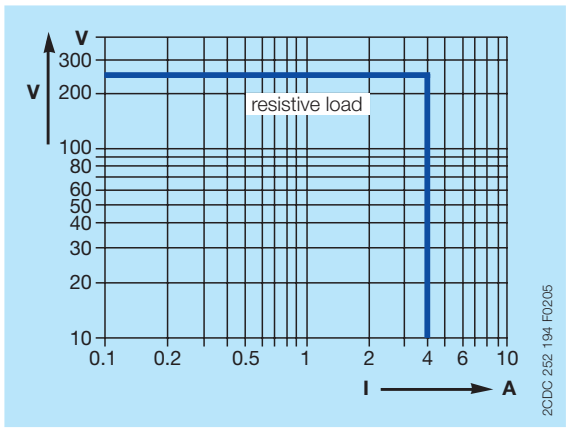

AC load (resistive)

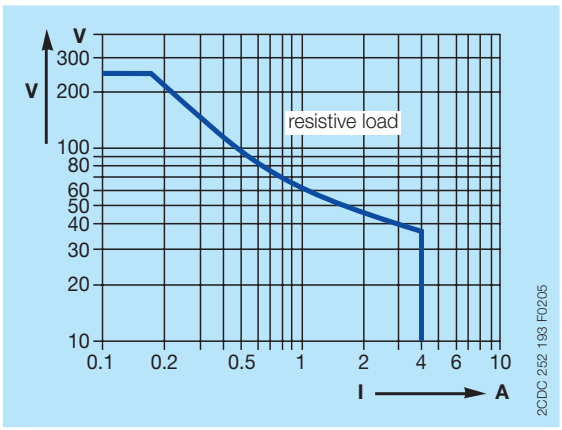

DC load (resistive)

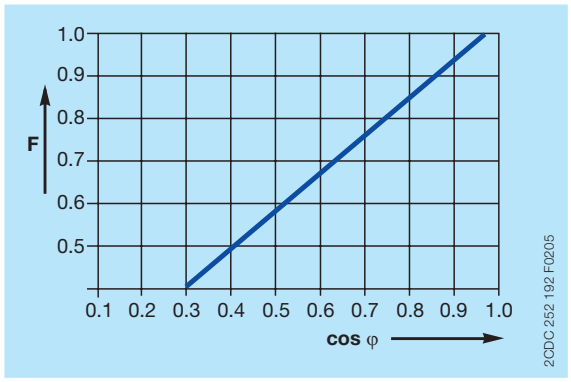

Derating factor F for inductive AC load

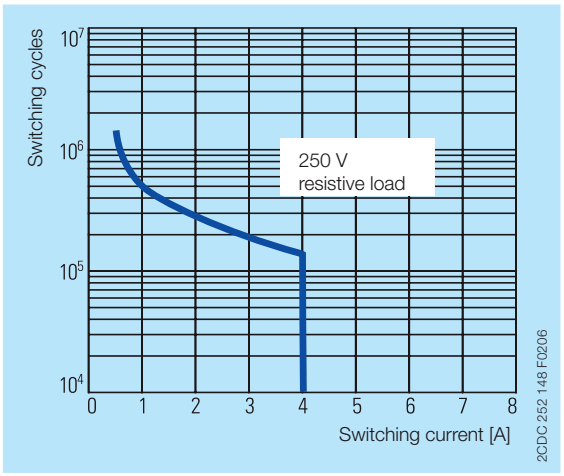

Contact lifetime

Dimensions

in **mm** and inches

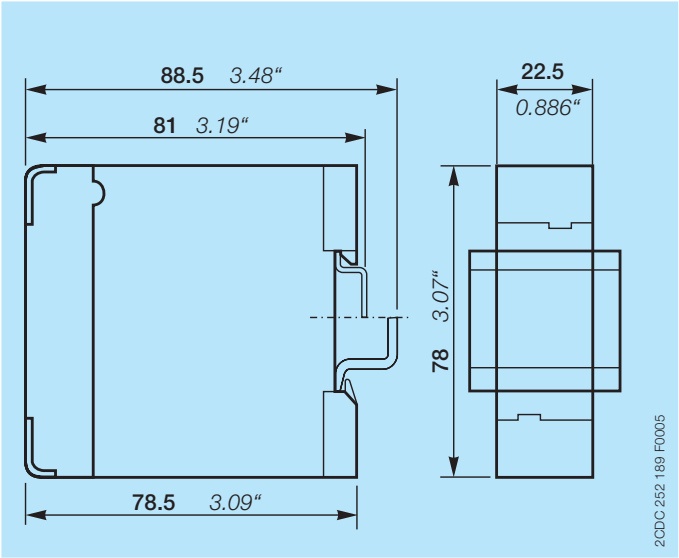

Further documentation

Document title	Document type	Document number
Electronic products and relays	Technical catalogue	2CDC 110 004 C020x

You can find the documentation on the internet at www.abb.com/lowvoltage -> Control Products -> Electronic Relays and Controls -> Three Phase Monitors.

CAD system files

You can find the CAD files for CAD systems at http://abb-control-products.partcommunity.com/PARTcommunity/Portal/abb-control-products -> Low Voltage Products & Systems -> Control Products -> Electronic Relays and Controls -> Three Phase Monitors -> CM-PVx - Three Phase Monitors.

Contact us

ABB STOTZ-KONTAKT GmbH
P. O. Box 10 16 80
69006 Heidelberg, Germany
Phone: +49 (0) 6221 7 01-0
Fax: +49 (0) 6221 7 01-13 25
E-mail: info.desto@de.abb.com

You can find the address of your local sales organisation on the ABB home page
http://www.abb.com/contacts
-> Low Voltage Products and Systems

Document number 2CDC 112 190 D0201 Rev B (08.2014)

Note:
We reserve the right to make technical changes or modify the contents of this document without prior notice. With regard to purchase orders, the agreed particulars shall prevail. ABB AG does not accept any responsibility whatsoever for potential errors or possible lack of information in this document.

We reserve all rights in this document and in the subject matter and illustrations contained therein. Any reproduction, disclosure to third parties or utilization of its contents – in whole or in parts – is forbidden without prior written consent of ABB AG.

Copyright© 2014 ABB
All rights reserved