RAFIX 22 FSR, signal lamp, round collar, lamp red / green, bezel white, Flat quick-connect terminal 2.8 x 0.8

DISCONTINUED



fields of application

- Measurement-control-regulation
- Electrical engineering
- Mechanical and system engineering
- Signalling systems
- Agricultural and forestry machinery
- Construction machinery
- Industrial robots

special features

- Light attachment with display white (unlit) / red / green
- Three signal states can be displayed with one lamp
- Plug-in connection (QC) with integrated reverse polarity protection
- Degree of protection: IP 65 at the front

description

RAFIX control devices are defined at RAFI as modular elements, consisting of an actuating element, if necessary a coupling and an individual contact or lighting unit.

Actuating elements (such as pushbuttons, emergency stop actuators, etc.) have the intended tactility, reset and function only when assembled with the appropriate switching elements.

Separate 2.8 x 0.8 mm plug-in connections and integrated reverse polarity protection allow three signaling states to be displayed in one lamp. This means that only one signal lamp is required where previously three were needed.

- Illumination LED red / LED green
- Operating voltage min. 8 ... max. 30 V DC -
- Integrated reverse polarity protection

technical data

general

Bezel color	white
Property of bezel / mushroom	translucent
Collar color	stainless steel
Luminous element color	red / green
Collar shape	round
Operating temperature, min.	-25 °C
Operating temperature, max.	60 °C
Storage temperature, min.	-40 °C
Storage temperature, max.	80 °C
illuminated	Yes

direct links

- RAFI eCatalog

The information in this data sheet only contains general descriptions and / or performance features, which may not apply precisely as described to the respective application, and which my change due to further product enhancements. The technical data, illustrations and other information about our products are the mere results of individual technical testing. These descriptions and other product features are only binding if they expressly agreed upon at the time of the conclusion of a binding contract. In all other cases, we reserve the right to make technical changes as well as changes of availability. Pictures and other graphic illustrations are approximations only. All product names may be trademarks or brand names of the RAFI Group or any other sub-supplier of RAFI. The use of such by any third parties for their own purposes may infringe the rights of the respective entity holding those rights.

RAFI GmbH & Co. KG

Ravensburger Str. 128-134
88276 Berg / Ravensburg
Germany
www.rafi-group.com,
info.headquarters@rafi-group.com

Packaging	Box
Packaging unit	10 pcs.
net weight	10.5 g
Degree of protection, front side, according to DIN EN 60529	IP65 IP67 IP69
UL Enclosure Type Rating front side	type 1 type 4X indoor
MOQ order	10 pcs.
RoHS compliant	Yes
REACH compliant	Yes

mounting diameters

Outside dimension, length	31.3 mm
Outside dimension, width	31.3 mm
Outside dimension, height	37.65 mm
Mounting hole	22.3 mm
Mounting depth	25.45 mm
Installation height	12.2 mm
Grid, min.	32 x 32 mm

mechanical data

Solderability	No
Terminal on the rear	Flat quick-connect terminal 2.8 x 0.8

electrical data

Operating voltage of the luminous element, min.	8 V
Operating voltage of the luminous element, max.	30 V
Voltage type	DC
Rated operating voltage	8-30 V
Power loss	0.39000 W

The information in this data sheet only contains general descriptions and / or performance features, which may not apply precisely as described to the respective application, and which my change due to further product enhancements. The technical data, illustrations and other information about our products are the mere results of individual technical testing. These descriptions and other product features are only binding if they expressly agreed upon at the time of the conclusion of a binding contract. In all other cases, we reserve the right to make technical changes as well as changes of availability. Pictures and other graphic illustrations are approximations only. All product names may be trademarks or brand names of the RAFI Group or any other sub-supplier of RAFI. The use of such by any third parties for their own purposes may infringe the rights of the respective entity holding those rights.

RAFI GmbH & Co. KG

Ravensburger Str. 128-134
88276 Berg / Ravensburg
Germany
www.rafi-group.com,
info.headquarters@rafi-group.com

drawings

Dimensioned drawing

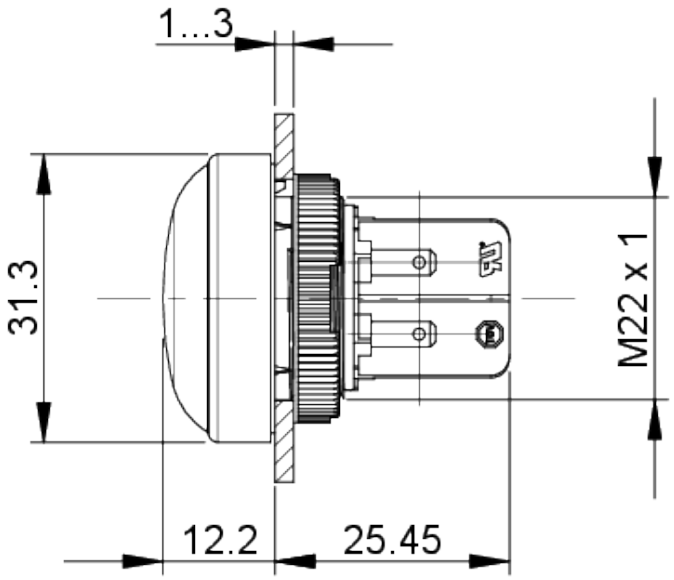

System drawing

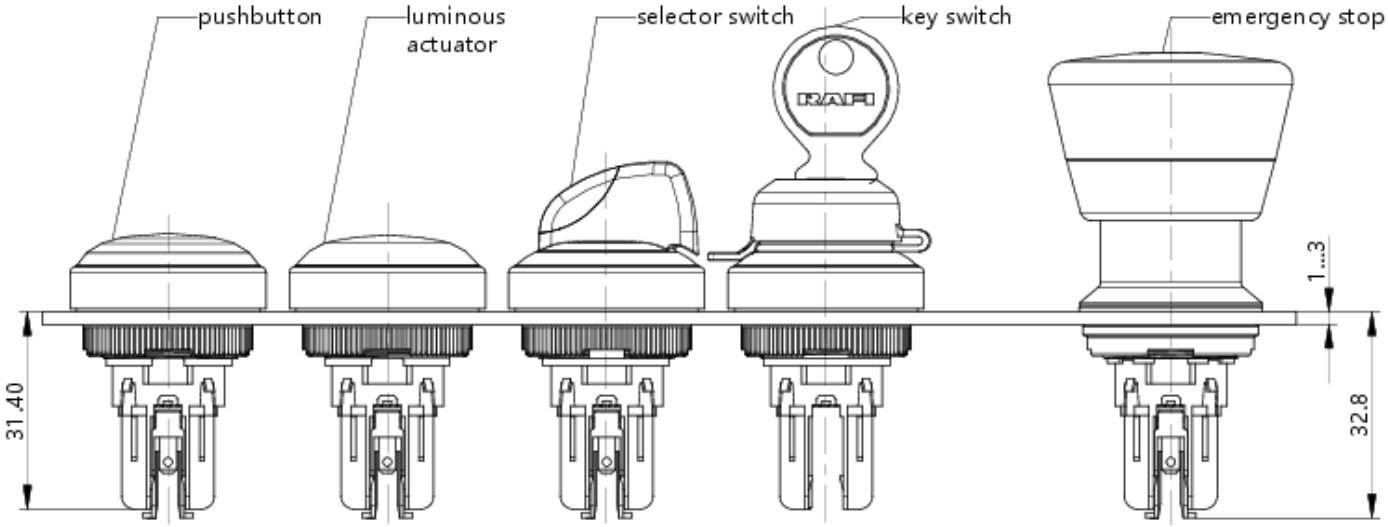

The information in this data sheet only contains general descriptions and / or performance features, which may not apply precisely as described to the respective application, and which my change due to further product enhancements. The technical data, illustrations and other information about our products are the mere results of individual technical testing. These descriptions and other product features are only binding if they expressly agreed upon at the time of the conclusion of a binding contract. In all other cases, we reserve the right to make technical changes as well as changes of availability. Pictures and other graphic illustrations are approximations only. All product names may be trademarks or brand names of the RAFI Group or any other sub-supplier of RAFI. The use of such by any third parties for their own purposes may infringe the rights of the respective entity holding those rights.

RAFI GmbH & Co. KG

Ravensburger Str. 128-134
88276 Berg / Ravensburg
Germany
www.rafi-group.com,
info.headquarters@rafi-group.com

Connection drawing

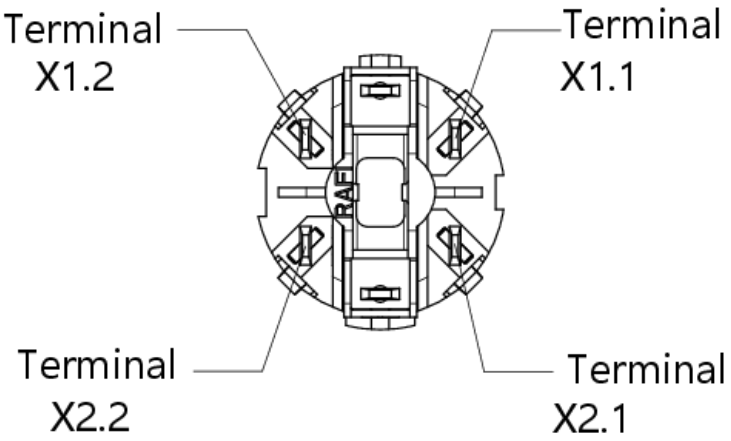

X1.1 + X2.1 green

X1.2 + X2.2 red

The information in this data sheet only contains general descriptions and / or performance features, which may not apply precisely as described to the respective application, and which my change due to further product enhancements. The technical data, illustrations and other information about our products are the mere results of individual technical testing. These descriptions and other product features are only binding if they expressly agreed upon at the time of the conclusion of a binding contract. In all other cases, we reserve the right to make technical changes as well as changes of availability. Pictures and other graphic illustrations are approximations only. All product names may be trademarks or brand names of the RAFI Group or any other sub-supplier of RAFI. The use of such by any third parties for their own purposes may infringe the rights of the respective entity holding those rights.

RAFI GmbH & Co. KG

Ravensburger Str. 128-134
88276 Berg / Ravensburg
Germany
www.rafi-group.com,
info.headquarters@rafi-group.com