NJ 2208 ECP

Popular item
SKF Explorer

Dimensions

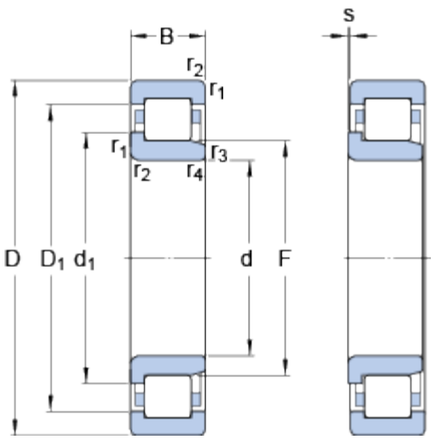

d		40	mm
D		80	mm
B		23	mm
d_1	≈	54	mm
D_1	≈	67.53	mm
F		49.5	mm
$r_{1,2}$	min.	1.1	mm
$r_{3,4}$	min.	1.1	mm
s	max.	1.9	mm

Abutment dimensions

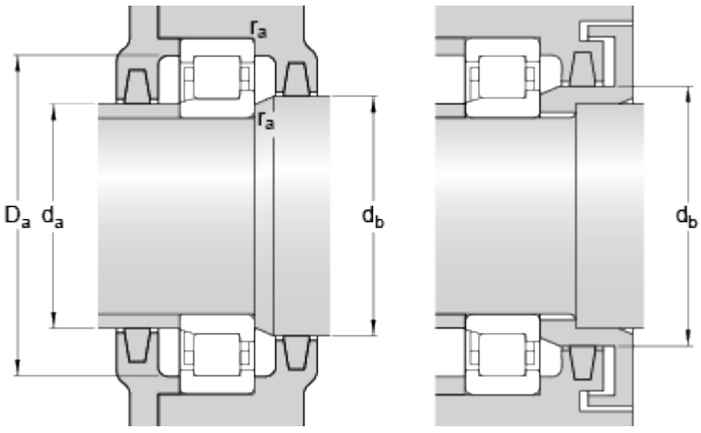

d_a	min.	47	mm
d_a	max.	48	mm
d_b	min.	56	mm
D_a	max.	72.8	mm
r_a	max.	1	mm

Calculation data

Basic dynamic load rating	C	81.5	kN
Basic static load rating	C_0	75	kN
Fatigue load limit	P_u	9.65	kN
Reference speed		9500	r/min
Limiting speed		11000	r/min
Calculation factor	k_r	0.2	
Limiting value	e	0.3	
Axial load factor	Y	0.4	

Mass

Mass bearing	0.5	kg

Associated products

Angle ring	HJ 2208 EC