Technical data sheet · Load monitoring



LOCC Box supply set
Accessories

Identification	Type	LOCC Box ES 7-6425
	Part-No.	716425

Description	
	LOCC-Box supply set consisting of supply terminal and end block maximum total current 40 A

Input	
Nominal voltage	DC 12 / 24 V
Rated current	max. DC 40 A
Reverse voltage protection	No
Termination	Spring terminal : 0.33 – 10 mm^2 (AWG 22–8) conductor connection cross section, single wire (solid): max. 10 mm^2 conductor connection cross section, fine wire: max. 6 mm^2 conductor connection cross section, fine wire with AEH: max. 6 mm^2

Load Side	
Output current	max. DC 40 A

General	
Operation temperature range	-25 °C – 60 °C
Storage temperature range	-40 °C – 85 °C
Dimensions (w × h × d)	10.0 × 119.4 × 63.7 mm

USA: LUTZE INC.
13330 South Ridge Drive • Charlotte, NC 28273, USA
Tel. +1 (704) 504-0222 • Fax +1 (704) 504-0223
www.lutze.com • info@lutze.com

United Kingdom: LÜTZE Ltd.
Unit 3, Sandy Hill Park
Sandy Way, Amington • GB-Tamworth, Staffs B77 4DU
Tel. +44 (0)1827 31333-0 • Fax +44 (0)1827 31333-2
www.lutze.com • sales.gb@lutze.co.uk

SYSTEMATIC TECHNOLOGY

Housing material	PA 6.6 (UL 94-V0; NFF I2, F2)
Field installation	rail TS 35 (EN 50022)
Protection class	IP 20
Installation postition	Optional
Weight (kg/piece)	0.035
Approvals	cURus

USA: LUTZE INC.
13330 South Ridge Drive • Charlotte, NC 28273, USA
Tel. +1 (704) 504-0222 • Fax +1 (704) 504-0223
www.lutze.com • info@lutze.com

United Kingdom: LÜTZE Ltd.
Unit 3, Sandy Hill Park
Sandy Way, Amington • GB-Tamworth, Staffs B77 4DU
Tel. +44 (0)1827 31333-0 • Fax +44 (0)1827 31333-2
www.lutze.com • sales.gb@lutze.co.uk

SYSTEMATIC TECHNOLOGY

Dimensions

Supply terminal

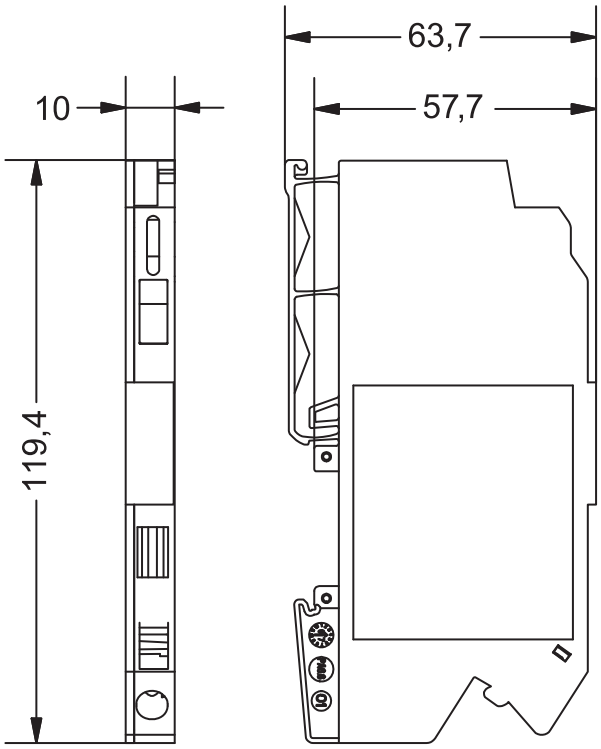

End block

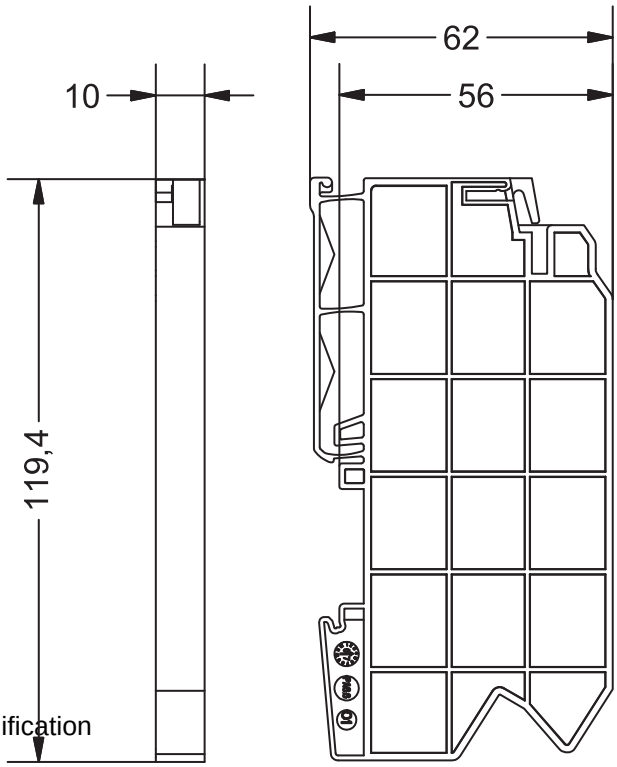

USA: LUTZE INC.
13330 South Ridge Drive • Charlotte, NC 28273, USA
Tel. +1 (704) 504-0222 • Fax +1 (704) 504-0223
www.lutze.com • info@lutze.com

United Kingdom: LÜTZE Ltd.
Unit 3, Sandy Hill Park
Sandy Way, Amington • GB-Tamworth, Staffs B77 4DU
Tel. +44 (0)1827 31333-0 • Fax +44 (0)1827 31333-2
www.lutze.com • sales.gb@lutze.co.uk

SYSTEMATIC TECHNOLOGY