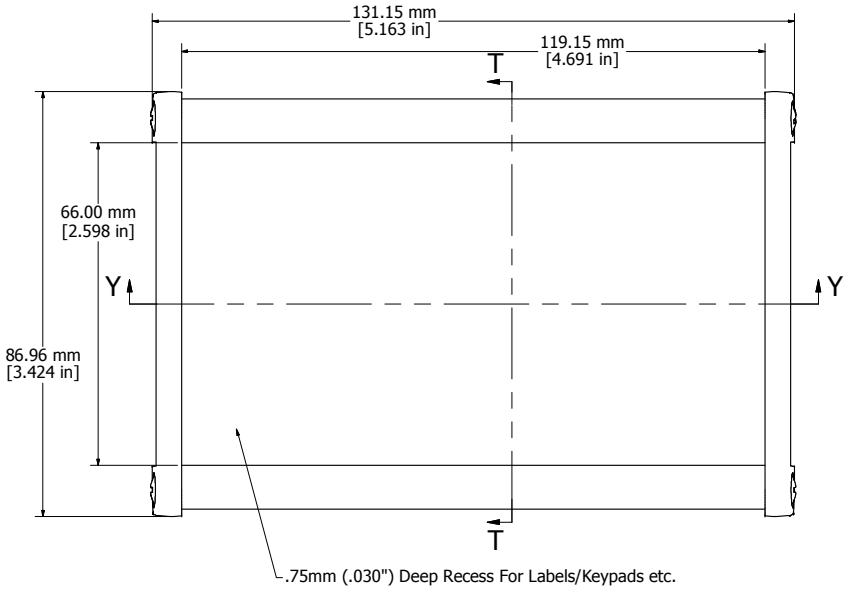

ASSEMBLY - VIEW FROM TOP

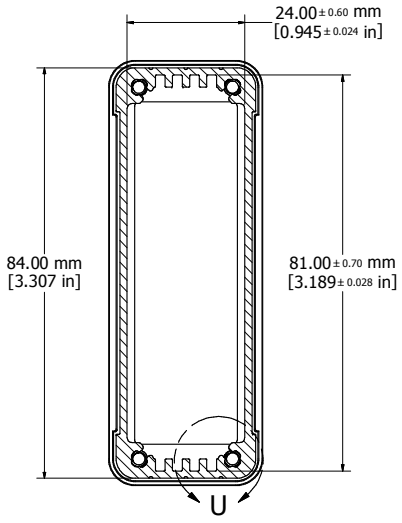

SECTION T-T

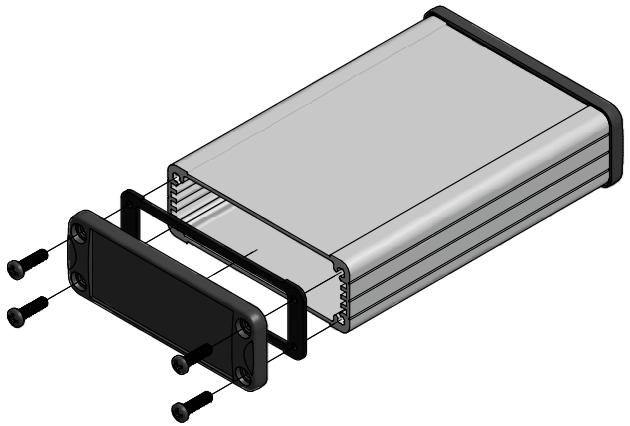

PROTECTION TO IP 65

Enclosures can be Factory Modified (Milling, Drilling, Printing etc.)
Contact Factory mjm@hammondmfg.com for quotes
Solid models of this enclosure available in STEP or IGES.

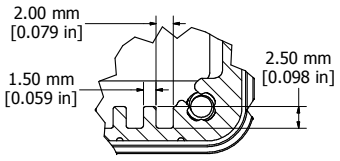

DETAIL U

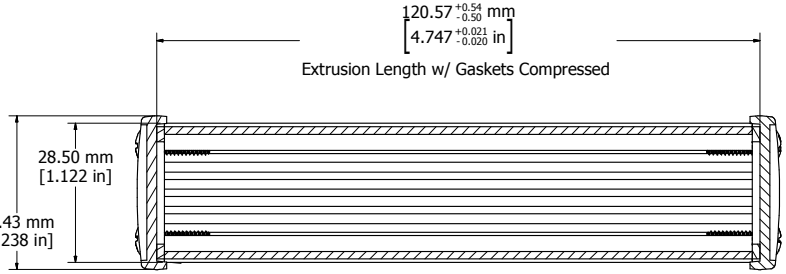

SECTION Y-Y

Fits 120mm (4.724") X 80mm (3.149") PCB

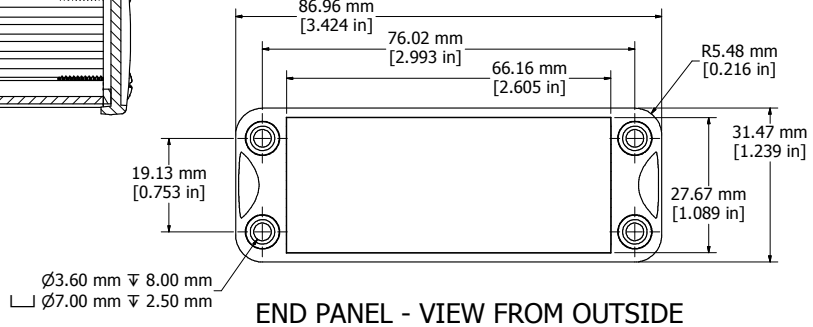

END PANEL - VIEW FROM OUTSIDE

NOTE
Purchased assembly includes box, end panels, #6 Taptight screws w/ O-rings, self adhesive rubber feet, and gaskets.
Box made from Extruded Aluminum 6063.
End panels made from ADC-12 Diecast Aluminum with a black powder paint finish.
WATERTIGHT 1457J1201
PART NUMBERS
Clear anodized box with black powder painted end panels — 1457J1201
Black powder painted box and end panels — 1457J1201BK
EMI/RFI SHIELDED (IP 54)
Clear anodized box with black powder painted end panels — 1457J1201E
Black powder painted box and end panels — 1457J1201EBK
ACCESSORIES
See website for accessories.

HAMMOND MANUFACTURING™

1457J1201

www.hammondmfg.com