KSC7 Series

Sealed Tactile Switch for SMT 6.2 x 6.2 mm, with 4.4 mm Height Soft Actuator

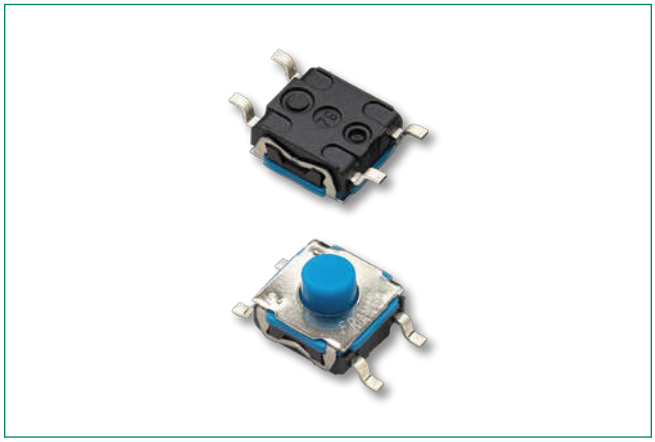

Description

The KSC7 series of sealed tactile switches for SMT are IP67 rated, 4.4 mm high momentary action tactile switches, featuring a soft actuator. The switches are available with a variety of operating forces and in a range of electrical lifespans, depending on model.

The KSC7 series are designed to give users a good tactile feeling, perfect for industrial, consumer, automotive and remote control applications due to the long lifecycle and durability.

Features & Benefits

- Positive adaptable tactile feeling
- J and G terminations
- Soft actuator 4.4mm high
- IP67
- RoHS and REACH complaint
- Compatible with lead free reflow soldering process of SMT devices

Applications

- Industrial electronics
- Consumer products
- Remote controls
- Transportation
- Medical

Specifications

Function	Momentary action
Contact Arrangement	1 make contact = SPST, N.O.
Terminals	J bend & Gullwing type for SMT
Sealing	IP67
Packaging	Switches delivered on continuous tape & reels of 1,000 pieces Dimensions according to EIA RS-481/ IEC 60286-3 standard External diameter 330 ± 2 mm

Dimensions (mm)

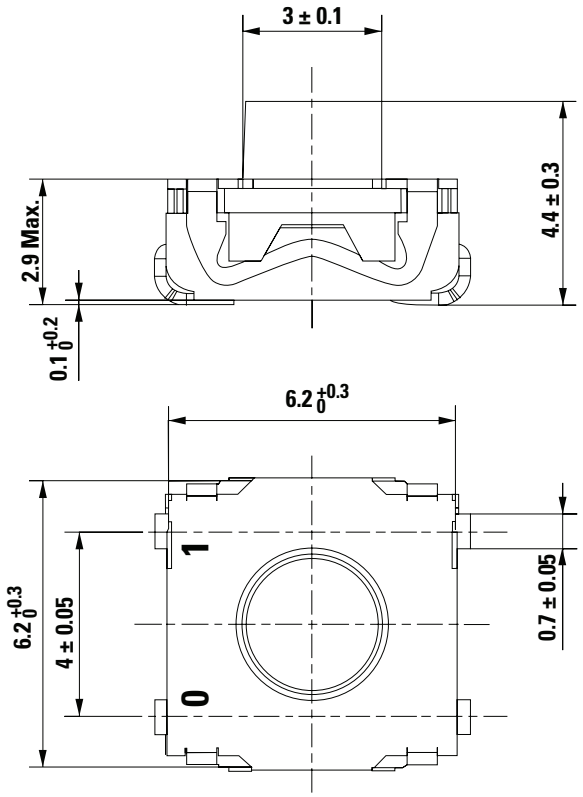

© 2025 Littelfuse, Inc.
Specifications are subject to change without notice.
Revised: VL 02/20/25

KSC7 Series

Sealed Tactile Switch for SMT 6.2 x 6.2 mm, with 4.4 mm Height Soft Actuator

Mechanical Characteristics

Part #	Operating Force FA (Newtons)	Operating Life (operations)	Travel (mm)
KSC701	1.6 ± 0.6	5,000,000	0.3 ± 0.2
KSC721	2.25 ± 0.55	300,000	0.3 ± 0.15
KSC741	3.9 ± 1	300,000	0.4 ± 0.2

Soldering Profile

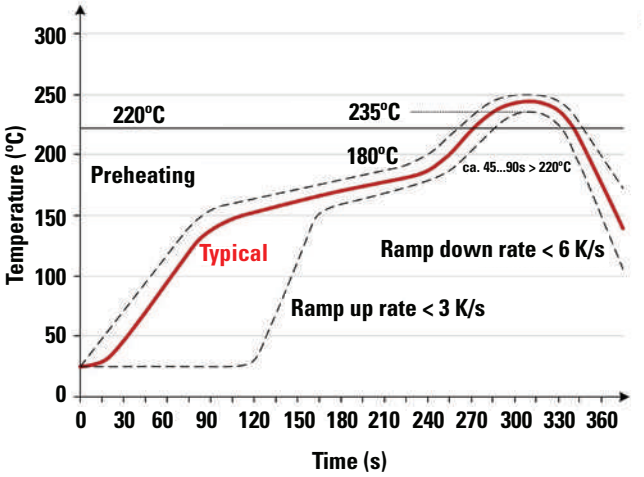

Note: Up to 2 reflow cycles in accordance with the above temperature profile

Soldering process: Depending on the application, this component is suited to the following methods:

- Terminals being silver or gold plated over a nickel barrier, the use of slightly activated flux is suitable.
- Lead free soldering process in accordance with the definition on the left.

J Terminations (mm)

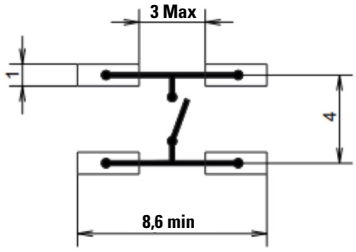

G Terminations (mm)

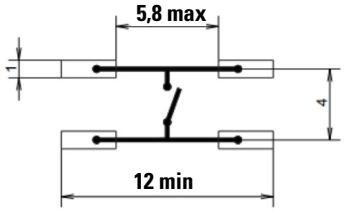

© 2025 Littelfuse, Inc.
Specifications are subject to change without notice.
Revised: VL 02/20/25

KSC7 Series

Sealed Tactile Switch for SMT 6.2 x 6.2 mm, with 4.4 mm Height
Soft Actuator

Tape & Reel

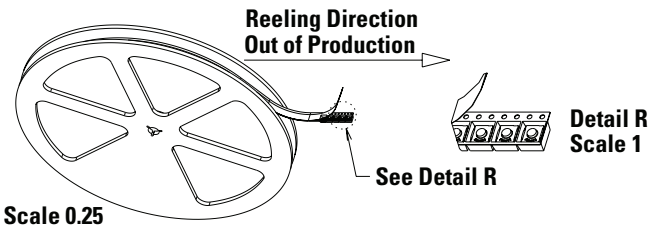

Packaging Details

Type	Tape & reel
Number of Parts in Packaging	2,000
Other Information	Tape and reel per EIA 481
Transport Conditions	According to specification NF H00-060

Ordering Number

Our easy build-a-switch concept allows you to mix and match options to create the switch you need. To order, select desired option from each category and place it in the appropriate box. For any part number different from those listed below, please consult your local representative.

KSC7 - x - x - x - xxx

Operating Force
0: 1.6 N (160 grams)
2: 2.55 N (255 grams)
4: 3.9 N (390 grams)
Note: See mechanical chart above to confirm specifications.

Contact Material
1: Silver
3: Gold

Termination
J: J Bend
G: Gullwing

LFS Lead free compatible, silver plated
LFG Lead free compatible, gold plated

Liability Limitation

This datasheet does not provide enough information for applications that require a certain level of quality or safety such as automotive, medical systems, or safety equipement. Please contact customer service for the contractual specification package.

Disclaimer Notice - Information furnished is believed to be accurate and reliable. However, users should independently evaluate the suitability of and test each product selected for their own applications. Littelfuse products are not designed for, and may not be used in, all applications. Read complete Disclaimer Notice at http://www.littelfuse.com/disclaimer-electronics.

© 2025 Littelfuse, Inc.
Specifications are subject to change without notice.
Revised: VL 02/20/25