Design changes Disconnection tool 3000 70

Product:

From now, the 6 disconnection tools are replaced by one universal tool, designed for all diameters.

The 3000 70 tool can be used in cases where access is difficult, to disconnect LF 3000 fittings and tubes.

This tool can be used for diameters from 4 to 14 mm.



3000 70 00

Changes:

The manufacturer of the previous tool has now stopped his activity and an equivalent tool has not been found.

This new tool is universal and replaces all previous tools.

It is more lightweight and compact.

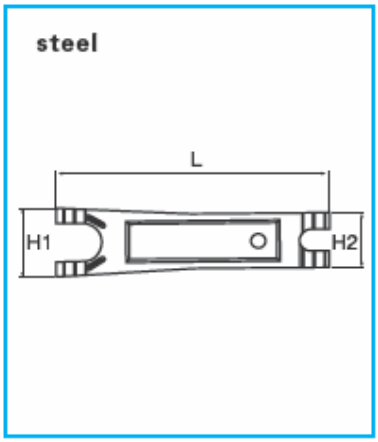

	H1	H2	L	kg
3000 70 00	25	20	96	0,020

Contact

Nicolas Le Bars
Product Range Manager
Fluid System Connectors Division
Europe

ENGINEERING YOUR SUCCESS.