Series 14

22.5mm 30.5mm IP67 5A 250VAC

INDICATOR | PUSHBUTTON | KEYLOCK | SELECTOR | BUZZER

Choose one component from each of the coloured sections to assemble a complete switch.
For other options or further information please contact your local sales office.

Product Profile

The Series 14 is a high quality switch range that includes pushbuttons, indicators, mushroom headed switches, selector switches and 2 position key switches.

Options include self cleaning, snap-action or low level switching elements.

Technical data see page 41

- IP67 Protection
- Switch Rating:
  Maximum Voltage, 250VAC
  Maximum Thermal Current, Ith = 5A
  24VDC/2A, 250VAC/2A
- Raised Mounting into 22.5mm cut out
- Flush Mounting into 30.5mm cut out
- Illumination using T5.5 Lamps or LED's
- All standard lenses are transparent with translucent diffuser
- Solder, plug-in or PCB connections

Indicator



Indicator body round for raised full face, black plastic, 22.5mm mounting

	Part No.
	14-030.005

For complete switch also order A



Indicator body for raised and flush mount, black plastic

	Part No.
	14-040.005
	For flush mount order bezel 704.955.1

For complete switch also order A

Illuminated pushbutton



Illuminated pushbutton actuator for raised and flush mount, black plastic, solder terminal, snap-action

	Part No.	Function	Contact type
	14-131.0252	Momentary	1NO/1NC
	14-132.0252	Momentary	2NO/2NC
	14-271.0252	Maintained	1NO/1NC
	14-272.0252	Maintained	2NO/2NC
	For flush mount order bezel 704.955.1		

For complete switch also order A



Illuminated pushbutton actuator for raised and flush mount, black plastic, solder or plug-in terminal, snap-action

	Part No.	Function	Contact type
	14-131.022	Momentary	1NO/1NC
	14-271.022	Maintained	1NO/1NC
	For flush mount order bezel 704.955.1		

For complete switch also order A

Keylock switch



Keylock switch, 2 position, raised

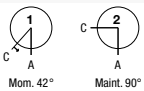

Graphic	Part No.	Function	Key out.
1	14-141.025K2	Momentary	A
2	14-235.025K2	Maintained	A
	For flush mount order bezel 704.955.1		

For complete switch also order A

Choose one component from each of the coloured sections to assemble a complete switch.
For other options or further information please contact your local sales office.

LED

A ACCESSORIES

Selector switch



Selector switch short lever 2 position, raised, snap-action

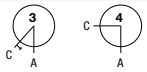

Graphic	Part No.	Function	Contact type
3	14-501.0252	Momentary	1NC/1NO
4	14-506.0252	Maintained	1NC/1NO
	For flush mount order bezel 704.955.1		

For complete switch also order A



Selector switch long lever 2 position, raised, snap-action

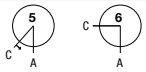

Graphic	Part No.	Function	Contact type
4	14-551.0252	Momentary	1NO/1NC
5	14-556.0252	Maintained	1NO/1NC

For complete switch also order A

Buzzer



Buzzer, raised, 22.5 mm mounting, IP65, 24VDC, 95dB ±8 at a distance of 0.1m

Part No.	Front finish
14-810.002	Black plastic
14-810.902	Nickel-plated brass

Buzzer



Buzzer, flush mount, 30.5 mm mounting, IP40, 24VDC, 95dB ±8 at a distance of 0.1m

Part No.	Front finish
14-810.910	Black aluminium
14-810.918	Natur aluminium

LED



LED, T5.5, single chip, 6 Volt and 12 Volt

Colour	Part No.	Voltage
Red	10-2106.3142	6VDC/15mA
Yellow	10-2106.3144	6VDC/15mA
Green	10-2106.3145	6VDC/15mA
Blue	10-2106.3146	6VDC/15mA
White	10-2106.3149	6VDC/15mA
Red	10-2109.1062	12VAC/DC, 7/14mA
Yellow	10-2109.1064	12VAC/DC, 7/14mA
Green	10-2109.1065	12VAC/DC, 7/14mA
Blue	10-2109.1066	12VAC/DC, 7/14mA
White	10-2109.1069	12VAC/DC, 7/14mA



LED, T5.5, single chip, 24 Volt and 28 Volt

Colour	Part No.	Voltage
Red	10-2112.1062	24VAC/DC, 7/14mA
Yellow	10-2112.1064	24VAC/DC, 7/14mA
Green	10-2112.1065	24VAC/DC, 7/14mA
Blue	10-2112.1066	24VAC/DC, 7/14mA
White	10-2112.1069	24VAC/DC, 7/14mA
Red	10-2113.1062	28VAC/DC, 7/14mA
Yellow	10-2113.1064	28VAC/DC, 7/14mA
Green	10-2113.1065	28VAC/DC, 7/14mA
Blue	10-2113.1066	28VAC/DC, 7/14mA
White	10-2113.1069	28VAC/DC, 7/14mA

INDICATOR | PUSHBUTTON | KEYLOCK | SELECTOR | BUZZER

Choose one component from each of the coloured sections to assemble a complete switch.
For other options or further information please contact your local sales office.

LED



LED, T5.5, single chip, 48 Volt

Colour	Part No.	Voltage
Red	10-2119.1042	48VAC/DC, 4/8mA
Yellow	10-2119.1044	48VAC/DC, 4/8mA
Green	10-2119.1045	48VAC/DC, 4/8mA
Blue	10-2119.1046	48VAC/DC, 4/8mA
White	10-2119.1049	48VAC/DC, 4/8mA

A Accessories



Lens, plastic for raised, round indicator body, full face

Colour	Part No.
Red	704.603.2
Yellow	704.603.4
Green	704.603.5
Blue	704.603.6
Clear	704.603.7
	For complete lens also order diffuser
	704.608.9 (see page 39)



Lens cap, round, transparent, plastic for raised and flush indicators with bezel and pushbutton actuators

Colour	Part No.
Red	704.602.2
Yellow	704.602.4
Green	704.602.5
Blue	704.602.6
Clear	704.602.7
Black	704.602.0
	For complete lens also order diffuser
	704.609.9 (see page 39)

A Accessories



Lens cap raised, transparent, plastic for raised and flush mount pushbutton actuators

Colour	Part No.
Red	704.611.2
Yellow	704.611.4
Green	704.611.5
Blue	704.611.6
Clear	704.611.7
	For complete lens also order diffuser
	704.610.9 (see page 39)



Lens cap, aluminium anodised for raised and flush mount pushbutton actuators

Colour	Part No.	Comment
Red	704.601.2	
Yellow	704.601.5	
Blue	704.601.6	
Silver	704.601.8	
Silver	704.601.81	Illuminated central dot
Black	704.601.0	
Black	704.601.01	Illuminated central dot
	704.601.9	Stainless steel



Bezel, raised and flush mount

Image	Part No.	Product description
1	704.600.1	Aluminium natural, raised
2	704.600.0	Plastic black, raised
2	704.600.6	Plastic grey raised
3	704.955.0	Aluminium black flush
3	704.955.1	Aluminium natural flush
3	704.955.9	Stainless steel, flush

Choose one component from each of the coloured sections to assemble a complete switch.
For other options or further information please contact your local sales office.

LED

A ACCESSORIES

A Accessories



Protective cover, raised pushbutton

	Part No.
	704.925.0



Protective front ring with silicon membrane for raised or flush mount pushbutton

Image	Part No.	Size
1	704.600.3	29 mm ∅ for raised pushbutton
2	704.955.3	35 mm ∅ for flush mount pushbutton



Blanking plate

	Part No.	Size
	704.960.7	22.5 mm ∅
	704.964.8	30.5 mm ∅

A Accessories



LED and lens remover

Image	Part No.	Product description
1	61-9740.0	LED remover
2	700.006.0	Lens remover

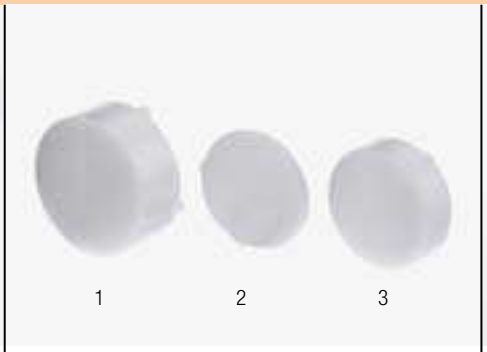

Diffuser for raised indicator, diffuser for flat lens indicator and pushbutton, diffuser for raised pushbutton

Image	Part No.	Product description
1	704.608.9	Diffuser for raised indicator
2	704.609.9	Diffuser for flat lens
3	704.610.9	Diffuser for raised illum. pushbutton



Marking plate selfadhesive, aluminium black, for raised and flush mount push buttons

Image	Part No.	Size	Colour
1	704.968.2	22.5 mm ∅	Black
2	704.968.3	30.5 mm ∅	Black

INDICATOR | PUSHBUTTON | KEYLOCK | SELECTOR | BUZZER

Choose one component from each of the coloured sections to assemble a complete switch.
For other options or further information please contact your local sales office.

A Accessories

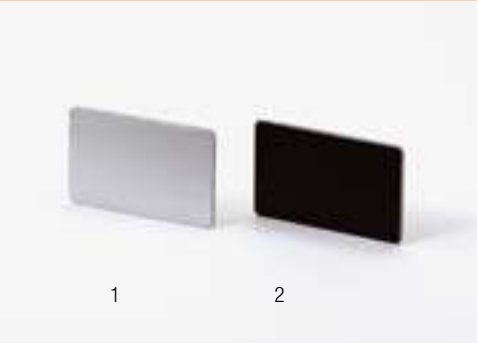

Engraving Label for Marking plate, selfadhesive, natural anodised or black aluminium

Image	Part No.	Size	Colour
1	704.968.0	23.5 x 14.5 mm	Aluminium
2	704.968.1	23.5 x 14.5 mm	Black

Actuator with snap-action switching element

Switching system

Self-cleaning, double-break, snap action switching system (with contact gap 2 x 0.5 mm).
1 normally closed or 1 normally open contact per element.
Snap-action switching elements with soldering terminals at the sides: up to 4 switching element can be on a pushbutton (max. 4 normally closed and 4 normally open contacts).
Snap-action switching element with axial plug-in terminals 2.8 mm stackable, only 1 switching element can be on a pushbutton.

Material

Material of contact
Gold plated silver

Switch housing
Plug-in-/soldering terminal
Diallylphthalate DAP, Polyamide 66, Polysulfone, heat-resistant and self-extinguishing
Soldering terminal: PA 6.6 Ultramide

Actuator housing
Polyamide

Mechanical characteristics

Terminals
Snap-action switching element with tinned soldering terminals at the sides:
Max. wire diameter 2 wires à 1.2 mm
max. wire cross-section of stranded cable 1 x 1 mm²

Snap-action switching element with axial plug-in terminals, which can also be used as soldering terminals: Plug-in terminal 2.8 x 0.5 mm

Soldering terminal:
Max. wire diameter 2 wires of 1 mm
Max. wire cross-section of stranded cable 2 x 0.75 mm² or 1 x 1.0 mm²

Actuating torque
Measured at the key or lever of the keylock- or selector switch
2.5 Ncm ... 5.5 Ncm, depending on the number of switching elements

Actuating force
Maintain 5 ... 7.8 N, depending on the number of switching elements
Momentary 3.2 ... 6 N, depending on the number of switching elements

Actuating travel

Illuminated pushbutton:	3 mm
Switch actuator 2 positions:	
Momentary action	1 x ca. 42° deflection momentary action
Maintained action	1 x ca. 90° deflection maintained action

Rebound time
≤5ms

Mechanical lifetime

Momentary action	2 million	Cycles of operation
Maintained action	1 million	Cycles of operation

Electrical characteristics

Standards
The devices comply with: EN IEC 61058-1

Rated voltage
250 VAC/DC as per EN IEC 61058-15

Contact resistance
New state ≤50 mΩ as per DIN IEC 60512-2-4

Electrostatic discharge
Keylock switch 15 kV

Rated current
5 A

Conventional free air thermal current Ith
5 A
The maximum current in continuous operation and at ambient temperature not exceeding the quoted maximum values.

Switch rating
250 VAC, 5 A (cosϕ 1)
250 VAC, 3 A (cosϕ 0.3)

Switch rating AC (cosϕ 0.7)

Voltage	125 VAC	250 VAC
Current	3 A	2 A

Switch rating DC (inductive) L:R = 30 ms

Voltage	24 VDC	60 VDC	110 VDC	220 VDC
Current	2 A	0.7 A	0.2 A	0.1 A

Electric strength
3000 VAC, 50 Hz, 1 min. between all terminals and earth, as per EN IEC 61058-1-15

Isolation resistance
>7 MΩ between the opend contats at 500 VDC, as per EN IEC 61058-1-15 (reinforced insulation)

Protection class
Class II

Environmental conditions

Storage temperature
–40 °C ... +85 °C

Service temperature
–25 °C ... +55 °C
For indicators and illuminated pushbuttons mounted as a block, make sure the heat can escape freely.

Protection degree
as per EN IEC 60529
front side IP67

Shock resistance
(semi-sinusoidal)
max. 150 m/s², pulse width 11 ms, 3-axis, as per EN IEC 60068-2-27

Vibration resistance
(sinusoidal)
max. 100 m/s² at 10 Hz ... 500 Hz, as per EN IEC 60068-2-6

Climate resistance
Damp heat state as per EN IEC 60068-2-30
Damp heat cyclic as per EN IEC 60068-2-78

Approvals

Approbations
CB (IEC 61058)
CSA
ENEC (EN 61058)
Germanischer Lloyd
UL

Declaration of conformity
CE

Buzzer

Buzzer system

System
Piezo disc

Material

Alarm buzzer case
Polyamide

Front cap
Plastic Polyamide
Metal Nickel-plated brass (sea-water proof)

Mechanical characteristics

Terminals
Plug-in terminal 2.8 x 0.5 mm

Electrical characteristics

Frequency (tone)
approx. 2.8 kHz continuous tone only

Sound pressure
95 db (A) ±8 dB at a distance of 0.1 m

Operation Voltage/Current

Operation Voltage	24 VDC ±10%
Operation Current	≤25 mA

Environmental conditions

Storage temperature
–35 °C ... +85 °C

Operating temperature
–25 °C ... +55 °C

Protection degree
as per EN IEC 60529, frontside
IP40, devices flush mounting
IP65, devices raised mounting

Approvals

Declaration of conformity
CE

14 Indicator

Raised

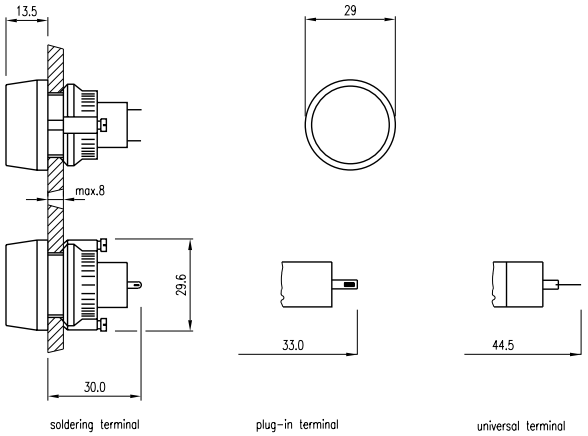

14 Indicator

Flush

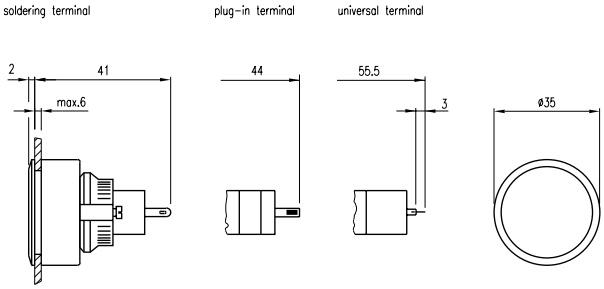

14 Illuminated pushbutton

Raised

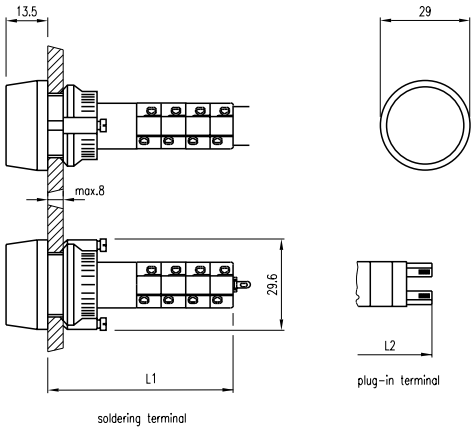

	L1	L2
1nc+1no	37.5	44.5
2nc+2no	45.0	–
3nc+3no	42.5	–
4nc+4no	60.0	–

14 Illuminated pushbutton

Flush Solder

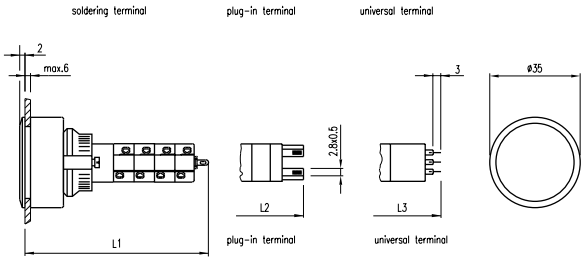

	L1	L2	L3
1nc+1no	48.5	56.0	55.5
2nc+2no	56.0	–	–
3nc+3no	63.5	–	–
4nc+4no	71.0	–	–

14 Selector switch

2-Position, Short Lever

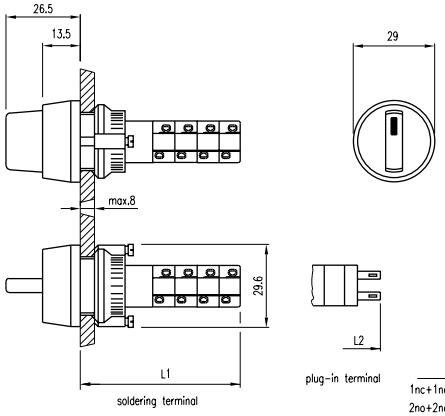

	L1	L2
1nc+1no	34.5	44.5
2no+2no	42.0	–
3nc+3no	49.5	–
4nc+4no	57.0	–

14 Keylock switch

2-Position

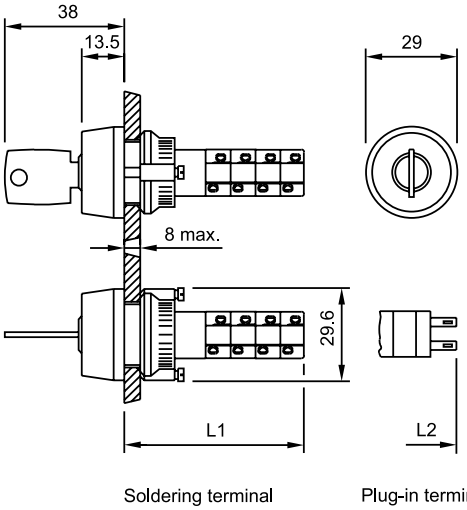

	L1	L2
1NC + 1NO	34.5	44.5
2NC + 2NO	42	-
3NC + 3NO	49.5	-
4NC + 4NO	57	-

14 Selector switch

2-Position, Long Lever

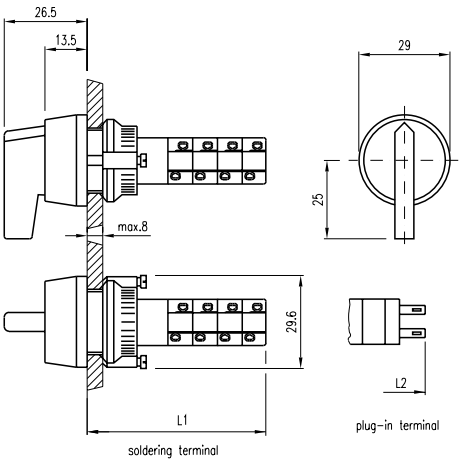

	L1	L2
1nc+1no	34.5	44.5
2nc+2no	42.0	–
3nc+3no	49.5	–
4nc+4no	57.0	–

14 Buzzer

Raised

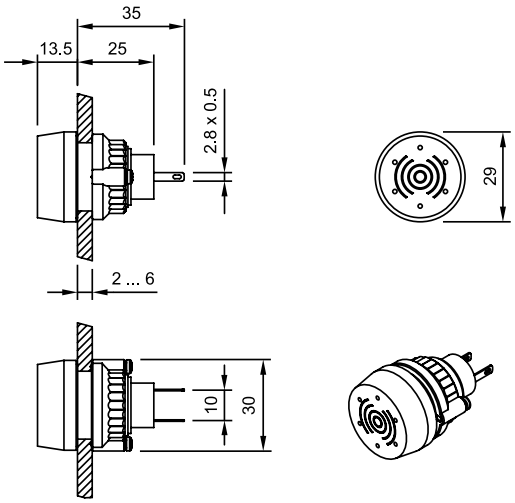

14 Buzzer

Flush

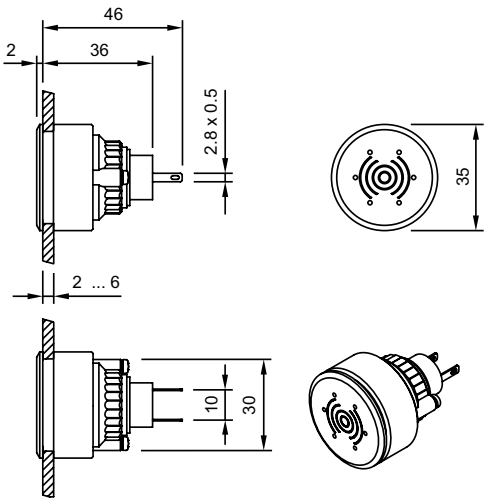

14 Cut-outs

Flush, Buzzer, Pushbutton, Indicator

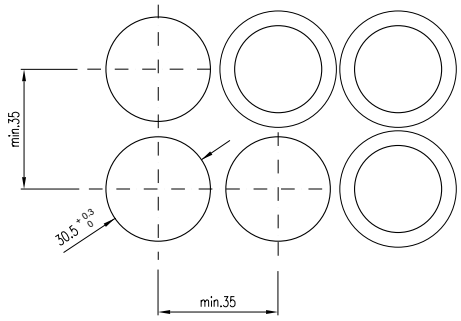

14 Cut-outs

Raised, Pushbuttons, Indicators, Keylocks, Selector

for devices
without anti-twist device

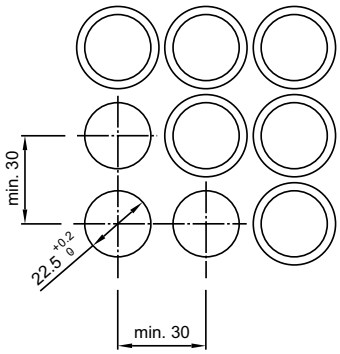

for devices
with anti-twist device (rotary)
(recommended for keylock switch)

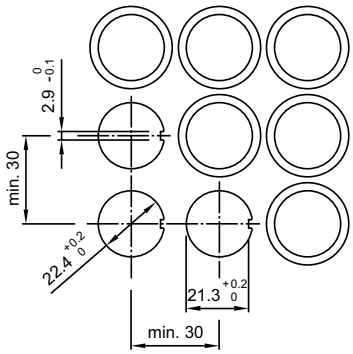

for devices
Selector switch long lever

