SZ
2533.000

Raum für Verpackungsdatum
Area for date of packing
(MMJJTT / MMYYDD)

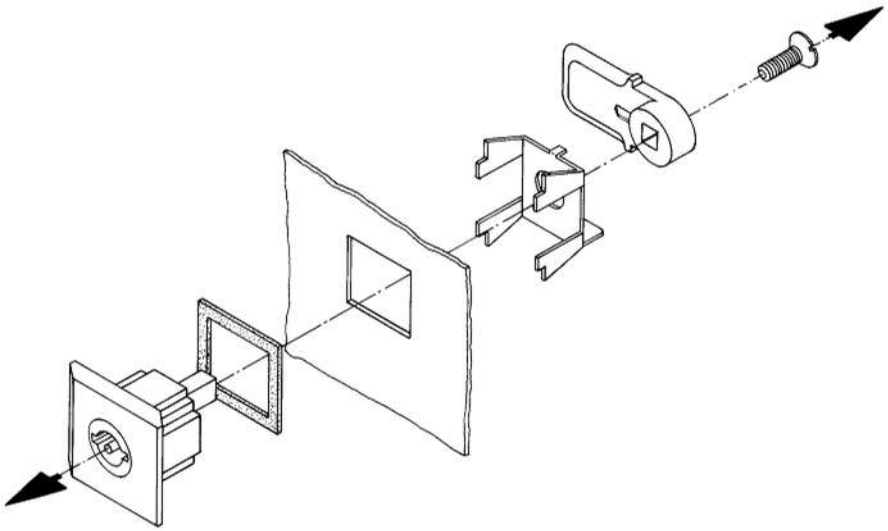

Zchng.-Nr. / No. of dwg. : A3780800SZ Versandbeutel-Nr. / No. of accessory bag : -	Lieferanten-Nr. / No. of supplier :

