LAPP GROUP	**DATENBLATT**	53806720
	SKINTOP® INOX SC	valid from: 22.12.2016

Hygienically designed cable gland from high-grade stainless steel is suitable for an extremely wide variety of applications – including the food and pharmaceutical industries. The material and shape meet the high requirements of these sectors. The smooth design minimizes the accumulation of moisture, dust, contamination or food residue.
The cable gland also offers great benefits for other applications, where the ambient conditions are harsh, such as those sited offshore. The compact design, the variable clamping range and the same wrench sizes simplify installation.
The SKINTOP® INOX SC is especially designed for copper-screened cables and is used to achieve a low-resistance screen contact.



Components:

Gland body	Stainless steel – V4A (1.4404 / 316L)
Cap nut	Stainless steel – V4A (1.4404 / 316L)
Insert with lamellar cage	Polyamide
Sealing ring	Silicone
Contact spring	CuBe, tin-plated
O-Ring	Silicone

Technical features:

Connecting thread	M12x1,5 up to M50x1,5 acc. to EN 60423
Protection class	Sizes M12, M16, M20: IP68 – 10 bar, test acc. to EN 60529 Sizes M25 up to M50: IP68 – 5 bar, test acc. to EN 60529 All sizes: IP69 acc. to EN 60529
Temperature range	-40 °C up to +100 °C
Transfer impedance	≤ 10 mOhm
Chemical resistance	ECOLAB certification

Other characteristics:

Functional safety
Optimal strain relief
Variable clamping range

Certificates:

ECOLAB

Norm References:

RoHS CE

DIN EN ISO 14 159
Safety of machinery - Hygiene requirements for the design of machinery

DIN EN 1672-2
Food processing machinery - Basic concepts -
Part 2: Hygiene requirements

For more information please see our current catalogue

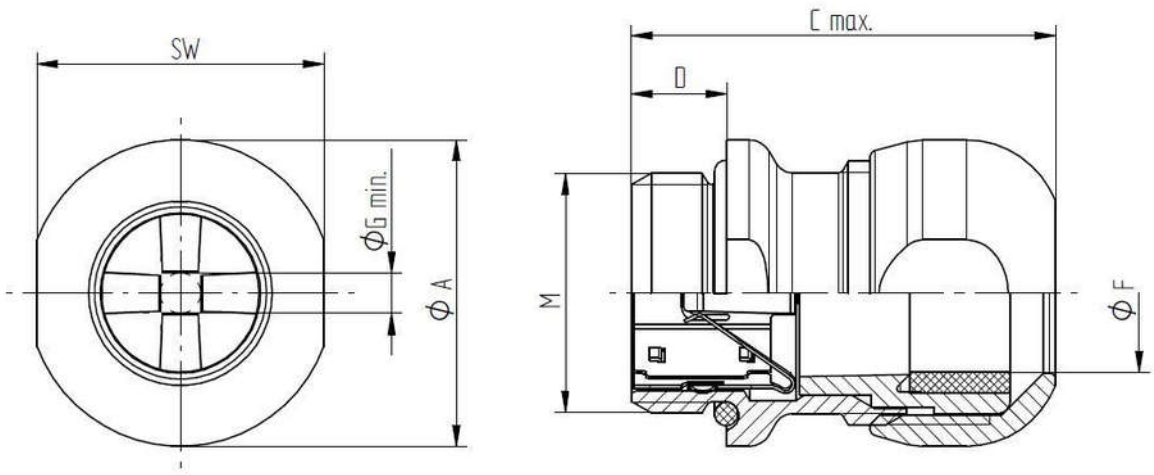

Article number	Article description	M	SW [mm]	Ø A [mm]	C max. [mm]	D [mm]	Ø F [mm] Clamping range	Ø G min [mm] over braid	O-Ring [mm]
53806720	SKINTOP INOX SC M 12	M12x1,5	16	17,2	29,3	6,5	4 - 7	2	9x2
53806722	SKINTOP INOX SC M 16	M16x1,5	20	21,4	32,4	7	6 - 10	4	13x2
53806724	SKINTOP INOX SC M 20	M20x1,5	24	25,6	35,5	8	7 - 13	5	17x2
53806726	SKINTOP INOX SC M 25	M25x1,5	29	30,8	39,2	8	9 - 17	7,5	22x2
53806728	SKINTOP INOX SC M 32	M32x1,5	36	38,2	44,6	9	11 - 21	9	28x2
53806731	SKINTOP INOX SC M 40	M40x1,5	45	48	51,2	9	19 - 28	15	36x2
53806732	SKINTOP INOX SC M 50	M50x1,5	54	58	56,2	10	27 - 35	21	46x2