11B500400220

FOUR-POLE CONTACTOR, IEC OPERATING CURRENT ITH (AC1) = 700A, AC/DC COIL, 220… 240VAC/DC



Product type designation			B500
Contact characteristics			
Number of poles		nr.	3
Rated insulation voltage Ui		V	1000
Rated impulse withstand voltage Uimp		kV	8
Operating frequency			
	Operational frequency min	Hz	25
	Operational frequency max	Hz	400
Conventional free air thermal current Ith		A	700
Operating current			
	Operational current AC3 (≤440V ≤55°C)	A	520
	Operational current AC4 (400V)	A	175
Short-time allowable current for 10s (IEC/EN60947-1)		A	4050
Protection fuse			
	gG (IEC)	A	800
	aM (IEC)	A	500
Making capacity (RMS value)		A	5000
Breaking capacity at voltage			
	Breaking capacity 440V	A	5000
	Breaking capacity 500V	A	4500
	Breaking capacity 690V	A	4000
Resistance per pole (average value)		mΩ	0.14
Power dissipation per pole (average value)			
	Power dissipation pole (average value) Ith	W	68.6
	AC3	W	35
Tightening torque for terminals			
	min	Nm	35
	max	Nm	35
	min	lbft	25.8
	max	lbft	25.8
Tightening torque for coil terminal			
	min	Nm	1
	max	Nm	1
	min	lbft	0.74
	max	lbft	0.74
Ambient conditions			
Temperature			
Operating temperature			
	min	°C	-50
	max	°C	70
Storage temperature			
	min	°C	-60
	max	°C	80
Max altitude		m	3,000
Operating position			

The characteristics described in this document are subject to updates or modifications at any time. The descriptions, technical and functional information, illustrations and instructions in this brochure are purely illustrative, and are consequently not contractually binding

11B500400220

FOUR-POLE CONTACTOR, IEC OPERATING CURRENT ITH (AC1) = 700A, AC/DC COIL, 220… 240VAC/DC

	normal allowable		Vertical plan ±30°
Mounting			Screw / DIN rail 35mm
Weight		g	18
Operations			
Mechanical life		Cycles	5,000,000
Electrical life		Cycles	700000
Safety related data			
Mirror contats according to IEC/EN 609474-4-1			Yes
EMC compatibility			Yes
AC coil operating			
Rated AC voltage at 50/60Hz, 60Hz			
	min	V	48
	max	V	480
AC operating voltage			
of 50/60Hz coil powered at 50Hz			
pick-up			
	min	%Us	80
	max	%Us	110
DC coil operating			
DC operating voltage			
Average coil consuption ≤20°C			
	in-rush	W	400
	holding	W	18
Max cycles frequency			
Mechanical operations		Cycles/h	3,600

Dimensions

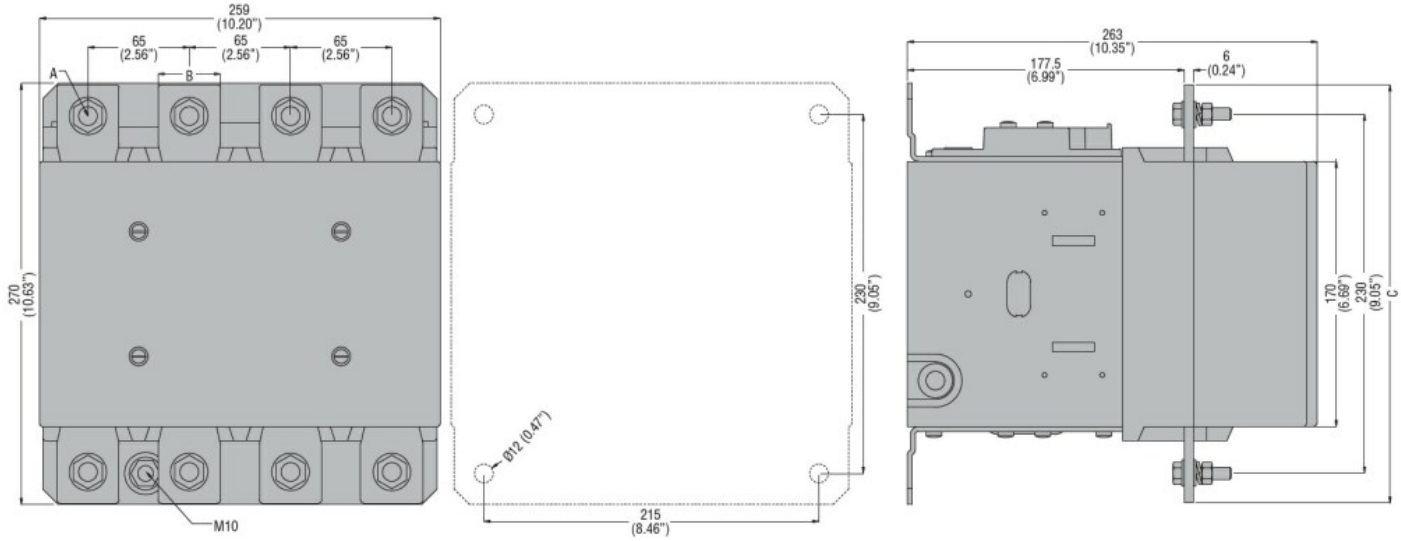

CONTACTOR TYPE	A	B	C
B500	M10	35 (1.38")	265 (10.43")
B630	M12	40 (1.57")	270 (10.63")

Wiring diagrams

The characteristics described in this document are subject to updates or modifications at any time. The descriptions, technical and functional information, illustrations and instructions in this brochure are purely illustrative, and are consequently not contractually binding

11B500400220

FOUR-POLE CONTACTOR, IEC OPERATING CURRENT ITH (AC1) = 700A, AC/DC COIL, 220… 240VAC/DC

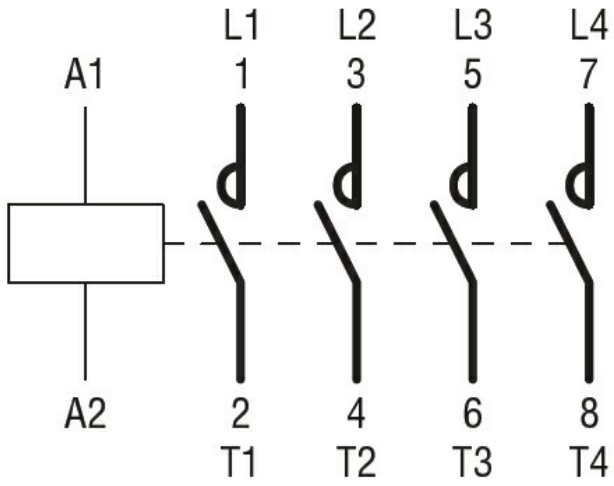

Certifications and compliance

Certifications

CSA C22.2 n° 60947-1
CSA C22.2 n° 60947-4-1
IEC/EN 60947-1
IEC/EN 60947-4-1
UL 60947-1
UL 60947-4-1

Compliance

CCC
cULus
EAC

ETIM 6 classification

EC000066 - Power contactor, AC switching

The characteristics described in this document are subject to updates or modifications at any time. The descriptions, technical and functional information, illustrations and instructions in this brochure are purely illustrative, and are consequently not contractually binding