Extrusion

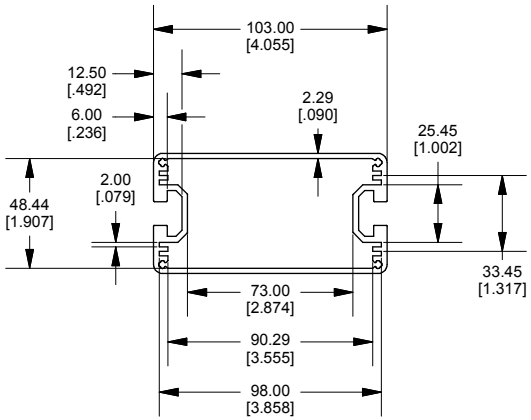

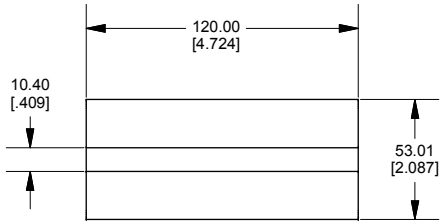

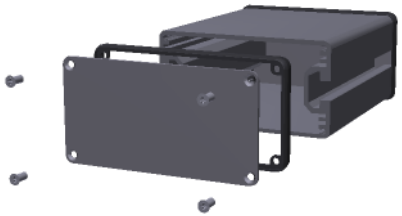

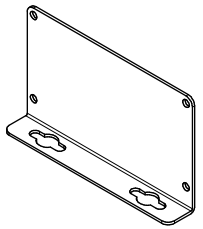

End Plate

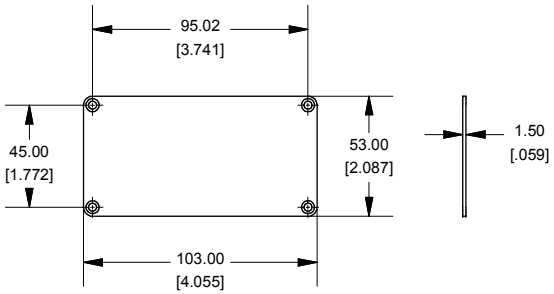

Open Bezel

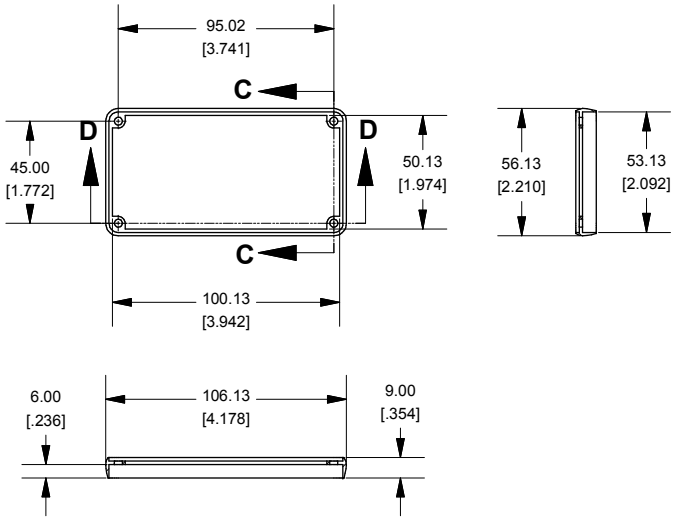

OPTIONAL FLANGE END PANELS
1455NF

Enclosures can be Factory Modified (Milling, Drilling, Printing etc.)
Solid models of this enclosure available in STEP or IGES.
Contact Factory mjm@hammondmfg.com

NOTE
Purchased assembly includes extrusion, plastic bezels, end panels, #6 Taptight screws and self adhesive rubber feet.
Box made from Extruded Aluminum 6063.
Bezels made from polycarbonate.

1455NC1201	
PART NUMBERS	
Clear Anodized	1455NC1201
ACCESSORIES	
T Bolt (M8 x 20)	1455TBOLT
T Nut (M8)	1455TNUT
T Spring Nut (M8)	1455TSNUT

HAMMOND MANUFACTURING™

1455NC1201

www.hammondmfg.com