finder®
SWITCH TO THE FUTURE

# Panel Heaters
# 25 - 50 - 100 - 150 - 250 - 400 W

7H
SERIES

- Drying kilns
- Hoists and cranes
- Road / tunnel lighting
- Plastic moulding machines
- Automatic car-washes
- Panels for electrical distribution
- Control panels
- Forced-air ventilators



FINDER reserves the right to alter characteristics at any time without notice. FINDER assumes no liability for damage to persons or property, caused as a result of the incorrect use or application of its products.

**Panel heaters**

**Type 7H.51.0.230.0025**
- Heating power 25 W

**Type 7H.51.0.230.0050**
- Heating power 50 W

- Nominal voltage (110...230)V AC/DC
- Safe touch
- PTC resistor, self regulating heating system
- Clip for 35 mm rail (EN 60715) mount

7H.51.0025/0050
Screw terminal



| | **7H.51.0.230.0025** | **7H.51.0.230.0050** |
|---|---|---|
| |  |  |
| | • Heating power 25 W<br>• Nominal voltage (110…230)V AC/DC<br>• Safe touch | • Heating power 50 W<br>• Nominal voltage (110…230)V AC/DC<br>• Safe touch |

* At 20°C ambient temperature
** Except upper protection grille

For outline drawings see page 7

| | | | |
|---|---|---|---|
| **Heating specification** | | | |
| Heating power * | W | 25 | 50 |
| Heater | | PTC resistor, self-regulating heating system | |
| Surface temperature** | °C | ≤ 100 | ≤ 100 |
| Housing | | Plastic according to UL94 – V0, black | |
| **Supply specification** | | | |
| Nominal voltage ($U_N$) | V AC (50/60 Hz)/DC | 110…230 | 110…230 |
| Rated current | A | 0.13 | 0.20 |
| Operating range | V AC/DC | 88…253 | 88…253 |
| **Technical data** | | | |
| Radiator | | Alluminium profile | |
| Electrical connection | | Screw terminals | |
| Fitting position | | Vertical | |
| Ambient temperature | °C | –45…+50 | –45…+50 |
| Protection category | | IP 20 | IP 20 |
| **Approvals** (according to type) | | CE EAC cULus | |

IV-2020, www.findernet.com

**Panel heaters**

**Type 7H.51.0.230.0100**
- Heating power 100 W

**Type 7H.51.0.230.0150**
- Heating power 150 W

- Nominal voltage (110...230)V AC/DC
- Safe touch
- PTC self regulating heating system
- Clip for 35 mm rail (EN 60715) mount

7H.51.0100/0150
Screw terminal



| | 7H.51.0.230.0100 | 7H.51.0.230.0150 |
|---|---|---|
| |  |  |
| | • Heating power 100 W<br>• Nominal voltage (110…230)V AC/DC<br>• Safe touch | • Heating power 150 W<br>• Nominal voltage (110…230)V AC/DC<br>• Safe touch |

* At 20°C ambient temperature
** Except upper protection grille

For outline drawings see page 8

| | | | |
|---|---|---|---|
| **Heating specification** | | | |
| Heating power * | W | 100 | 150 |
| Heater | | PTC resistor, self-regulating heating system | |
| Surface temperature** | °C | ≤ 80 | ≤ 80 |
| Housing | | Plastic according to UL94 – V0, black | |
| **Supply specification** | | | |
| Nominal voltage ($U_N$) | V AC (50/60 Hz)/DC | 110…230 | 110…230 |
| Rated current | A | 0.45 | 0.70 |
| Operating range | V AC/DC | 88…253 | 88…253 |
| **Technical data** | | | |
| Radiator | | Alluminium profile | |
| Electrical connection | | Screw terminals | |
| Fitting position | | Vertical | |
| Ambient temperature | °C | –45…+50 | –45…+50 |
| Protection category | | IP 20 | IP 20 |
| **Approvals** (according to type) | | CE EAC cULus | |



IV-2020, www.findernet.com

**Panel heaters fan assisted**

**Type 7H.51.8.230.0250**
- Heating power 250 W

**Type 7H.51.8.230.0400**
- Heating power 400 W

- Nominal voltage 230 V AC
- Safe touch
- PTC resistor, self regulating heating system
- Fast wiring terminals
- Clip for 35 mm rail (EN 60715) mount

7H.51.0250/0400
Push-in terminal



| | | NEW 7H.51.8.230.0250 | NEW 7H.51.8.230.0400 |
|---|---|---|---|
| | |  |  |
| | | • Heating power 250 W<br>• Nominal voltage 230 V AC<br>• Fan assisted | • Heating power 400 W<br>• Nominal voltage 230 V AC<br>• Fan assisted |
| **Heating specification** | | | |
| Heating power * | W | 250 | 400 |
| Heater | | PTC resistor, self-regulating heating system | |
| Surface temperature** | °C | ≤ 30 | ≤ 30 |
| Air flow rate | $m^3/h$ | 30 | |
| Fan - Life time at 25 °C | h | 50 000 | 50 000 |
| Housing | | Plastic according to UL94 – V0, black | |
| **Supply specification** | | | |
| Nominal voltage ($U_N$) | V AC (50/60 Hz) | 230 | 230 |
| Rated current | A | 1 | 1.7 |
| Operating range | V AC | 184...253 | 184...253 |
| **Technical data** | | | |
| Radiator | | Alluminium profile | |
| Electrical connection | | Screwless terminal | |
| Fitting position | | Vertical | |
| Ambient temperature | °C | -40…+50 | -40…+50 |
| Protection category | | IP 20 | IP 20 |
| **Approvals** (according to type) | | CE EAC cULus | |

* At 20°C ambient temperature
** Except upper protection grille

For outline drawings see page 8

IV-2020, www.findernet.com

## Ordering information

Example: 7H series, Panel heaters, heating power 50 W, 110…230 V AC/DC.

| 7 | H | . | 5 | 1 | . | 0 | . | 2 | 3 | 0 | . | 0 | 0 | 5 | 0 |
|---|---|---|---|---|---|---|---|---|---|---|---|---|---|---|---|

**Series**

**Type**
51 = Panel heaters safe touch

**Supply version**
0 = AC (50/60 Hz)/DC
8 = AC (50/60 Hz) only fan assisted version

**Supply voltage**
230 = 110…230 V
230 = 230 V only fan assisted version

**Heater power**
0025 = 25 W
0050 = 50 W
0100 = 100 W
0150 = 150 W
0250 = 250 W
0400 = 400 W

## General data

G

| Terminals | | solid cable | stranded cable |
|---|---|---|---|
| Max. wire size (push-in terminals) | mm² | 2 x 1.5 | 2 x 1.5 |
| | AWG | 2 x 16 | 2 x 16 |
| Max. wire size (screw terminals) | mm² | 1 x 2.5 | 1 x 1.5 |
| | AWG | 1 x 12 | 1 x 16 |
| Screw torque | Nm | 0.5 | |

## Wiring diagrams

**Fan assisted version**

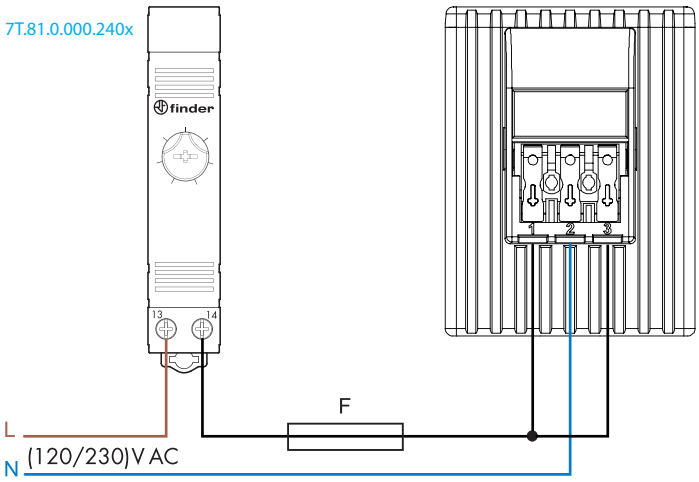


1 = L (heater)
2 = N
3 = L (fan)

F = aM 6.3 A

**NOTE:** Separate supply (L) terminals for the heater and the internal fan allow them to be powered independently.
So,dependent on the specific situation, the installer might wish the heating element to be controlled by an upstream thermostat but require the fan to run continuously (although the latter will significantly reduce the product's life).

## Wiring diagrams

**NOT Fan assisted versions**

**AC version**

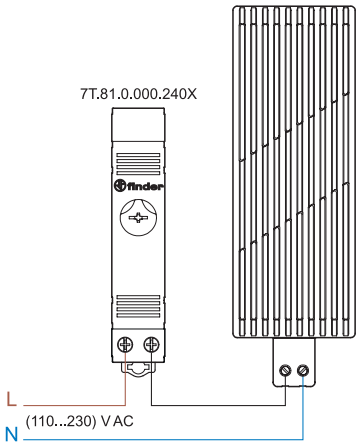


**DC version**

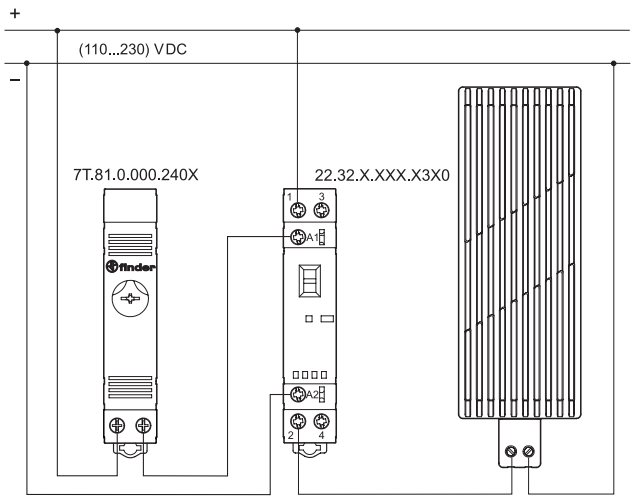


**SAFETY NOTE**

For reasons of safety and performance , heaters must be mounted in the following way:

1. keep a distance of 100 mm. from components above and below and of 60 mm from side components
2. install vertically (cables below heater) in the bottom part of cabinet
3. do not mount heaters over easily inflammable materials
4. do not operate in corrosive ambient air

**WARNING**

Do not cover the heater.
The 7H.51 Heater surface is very hot for 15-20 minutes after disconnecting.
During working and maintenance, don't touch it.
**Caution:** risk of burns, temperatur of the side less than +100 °C..

## Outline drawings

Type 7H.51.0025
Screw terminal



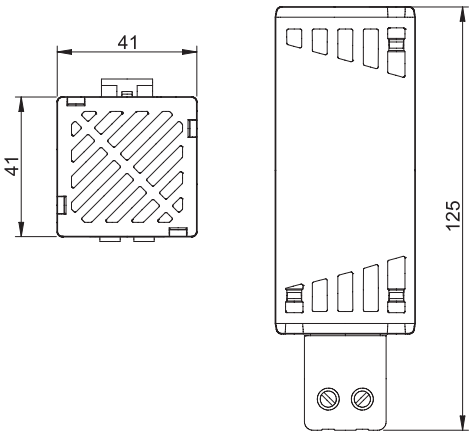


Type 7H.51.0050
Screw terminal



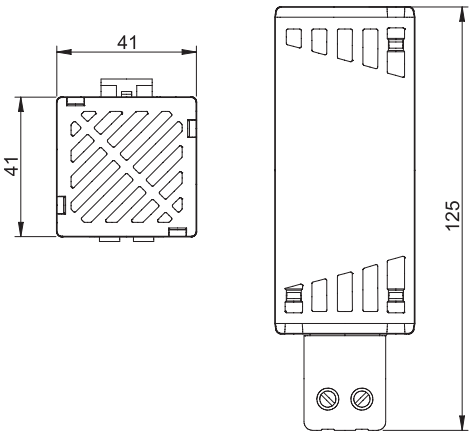


G

## Outline drawings

Type 7H.51.0100
Screw terminal



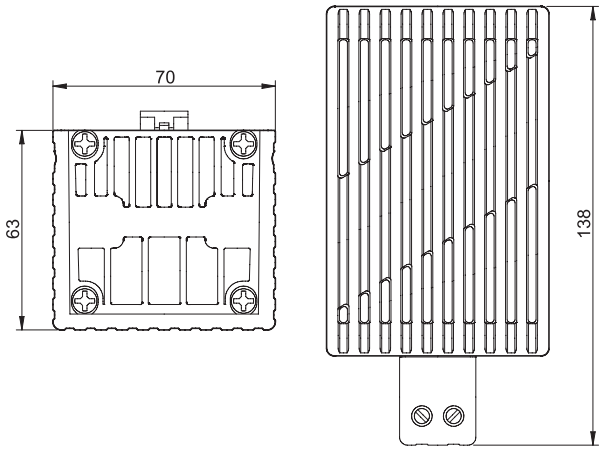


Type 7H.51.0150
Screw terminal



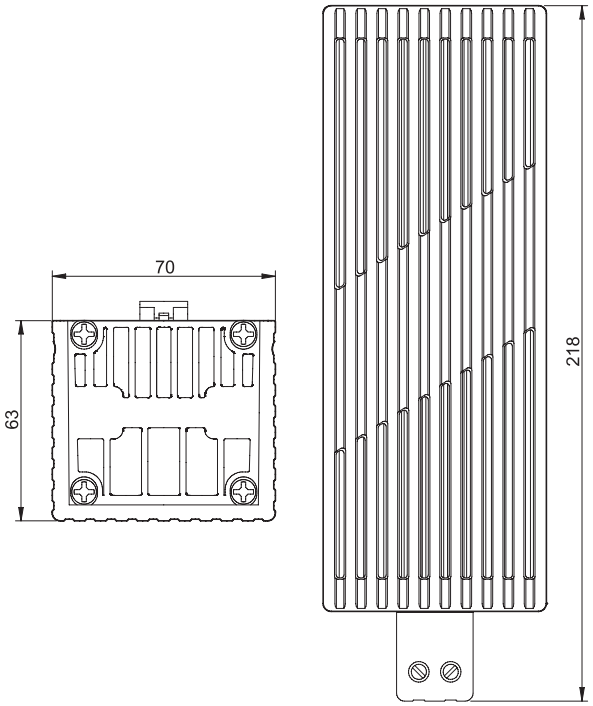


Types 7H.51.0250 / 0400
Push-in terminal

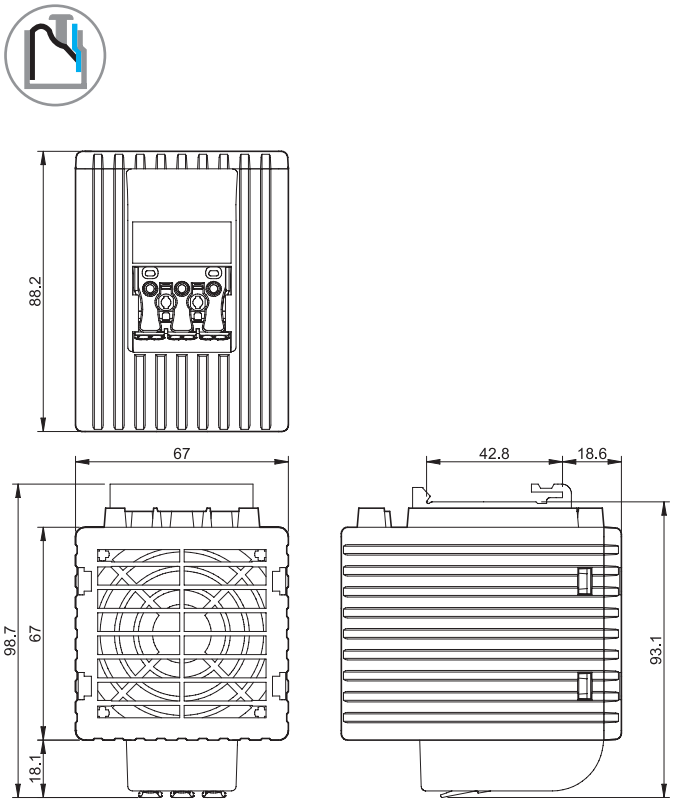


G



Please see general technical information

IV-2020, www.findernet.com