Softstarters
Type PSR, PSS & PST(B)

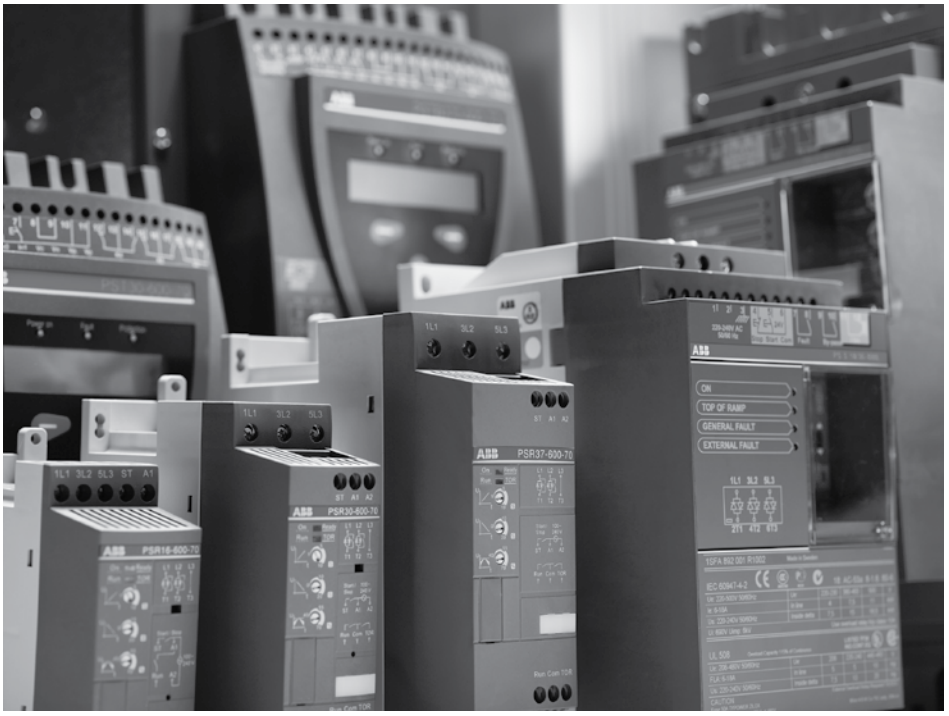

General information



PSR Softstarters



PSS Softstarters

Softstarters

From the moment the first electrical motors appeared, engineers have been searching for a way to avoid electrical and mechanical problems that occur using Across the Line and Wye-Delta starters. ABB has been producing softstarters since the beginning of the 1980's. The valuable experience gained since the early 80's has been incorporated into the design of today's product ranges. With the latest series named PST, ABB has taken a significant step further in soft starting technology. Matching modern power electronics with smart circuitry and software, the new PST softstarter offers superior electronic control of the current and voltage during motor start-up, in addition to several new design features.

The solution to both mechanical and electrical problems

AC motors, "the workhorse of the industry", that are used to drive fans, crushers, agitators, pumps, conveyors etc., are unnecessarily causing unwanted load peaks day in and day out in production plants all over the world. These violent starts cause damage in several ways. Among them are:

- Electrical problems due to voltage and current transients arising from Across the Line or Wye-Delta starts. Such transients may overload the local supply network and cause unacceptable voltage variations that interfere with other electrical equipment connected to the network.
- Mechanical problems that address the entire drive chain from motor to driven equipment, to severe stress.
- Operational problems, such as pressure surges in pipelines, damage to products on conveyor belts and uncomfortable escalator rides.

The financial consequences are considerable: every technical problem and every breakdown, costs money – in terms of repairs as well as lost production.

The easy solution to all of these problems is to install an ABB Softstarter type PSR, PSS or PST. With ABB Softstarters, it is possible to start and stop smoothly while keeping mechanical and electrical stresses to a minimum.

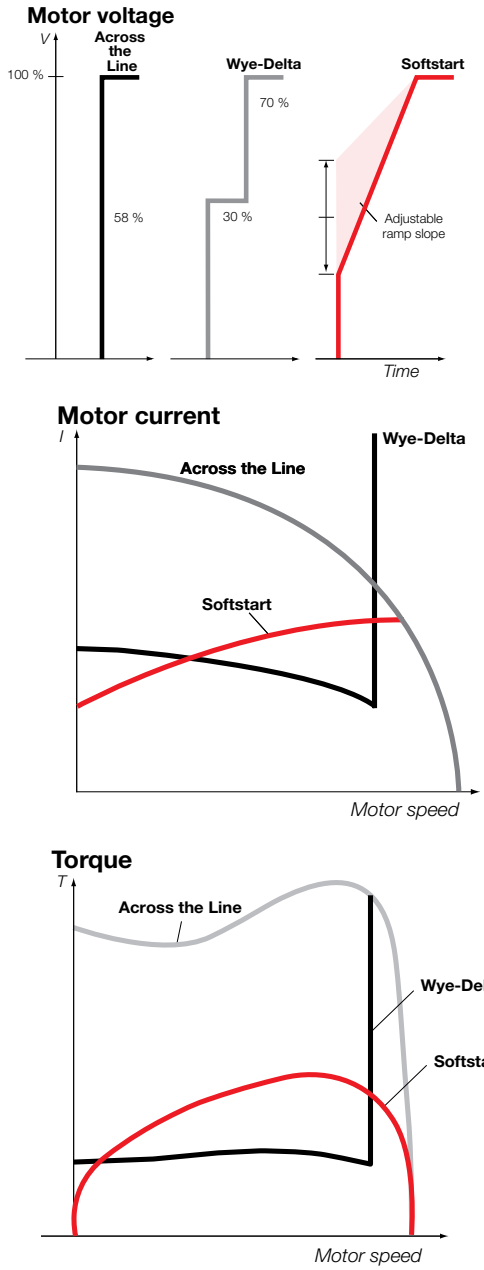

Graphs showing the basic differences between across the line starting, Wye-Delta starting and soft starting in terms of the motor voltage (V), motor current (I) and motor torque (T).



PST Softstarters

ABB softstarters - The Complete Range

ABB offers three different ranges of softstarters to cover every customer need for solutions for small to medium sized motor applications, from 3 A to 1810 A. The overview table at the bottom of this page shows the main characteristics of the different types. For more specific technical details and ordering data, see the following pages.

Compact Range

Type PSR, covers motor currents from 3 to 105 A. It is the latest addition to the softstarter family and has an attractive, compact design. Further, the system concept includes MMS and the softstarters are available for remote control connection using the FieldBusPlug as an accessory. All sizes include a Run signal relay, while from sizes 25 A - 105 A the PSR Softstarters are also provided with an output signal for TOR (Top Of Ramp), i.e. full voltage. When an auxiliary cooling fan is added, the starting capacity is increased.

- Current ratings 3 A - 105 A, 1/2 HP - 75HP at 480V
- Motor voltage 208 – 600 V
- Supply voltage 24 VDC or 100-240 VAC
- Easy to install and adjust
- DIN rail or screw mounting
- Integrated by-pass contacts
- 2-phase controlled softstarter

With their compact design, the PSR Softstarters are ideal for installation in places where space is limited and where there is a demand for easy installation.

Flexible Range

Type PSS, covers motor currents from 18 to 300 A and offers a flexible solution with easy installation and setup.

- ***Flexible:*** With two connection possibilities, either in line with the motor or inside the motor delta. It can also be equipped with current limit.
- ***Easy to set up:*** With just three clearly labeled rotary switches on the front of the unit it is possible to adjust the PSS Softstarter for a wide range of applications.
- ***Solid state electrical circuit***: This ensures the highest reliability and reduces maintenance to a minimum, even in applications with frequent starts and stops.

Advanced Range

Type PST(B), covers motor currents from 30 to 1050 A and provides advanced functionality, including integrated protections, programmable signal relays, a flexible communication system and an LCD display. Sizes PSTB370 to PSTB1050 include a by-pass contactor.

- ***Advanced integrated protections***: For the motor; integrated electronic overload relay, phase monitoring relays, high current and PTC protection. For the Softstarter; advanced thyristor protection.
- ***Flexible bus communication system***: By using the ABB FieldBusPlug (FBP), you can decide at any time which bus system to select within the ABB FBP range. The interface between the PST Softstarter and the ABB FBP is always the same, independent of size and delivery date.
- ***LCD display***: With 14 languages, a menu system similar to your mobile phone, pre-programmed application settings and automatic status and event logging, it couldn't be easier to set up and operate!
- ***Programmable signal relays***: gives you several possibilities for signalling warnings, faults and other events.
- ***Torque control***: allows you to start and stop motors with a more linear acceleration than when using voltage ramp.

• Standard
O Optional
– Not available

PSR3 ...105	PSS18/30 ...300/515	PST30 ... PSTB1050B	
O	–	•	Field bus communication enabled
–	–	•	Real time clock
–	–	•	Programmable fault supervision functions
–	–	•	Programmable warning functions
–	–	•	PTC input for motor protection
–	–	•	High current protection
–	–	•	Phase imbalance /phase reversal protection
–	–	•	Locked rotor protection
–	–	•	Thyristor overtemperature protection
–	–	•	Motor overload protection
–	–	•	Four button keypad (external keypad available)
–	–	O	External keypad
–	O	•	Current limit control
–	•	•	In Line and Inside Delta connection
•	•	•	LED indications
•	–	• ①	Built-in by-pass contactor
•	•	•	Ramp Start/Stop
–	–	•	Torque control
–	–	•	Analog output

① On PSTB

Certifications, Approvals, Directives & Standards
Type PSR, PSS, PST and PSTB

The table below shows the approvals and certifications for different softstarters.
For approvals and/or certificates not listed below, please contact your local ABB sales office.

Certifications and approvals

	Certifications								Approvals: ship classification societies		
Abbreviation Approved in	CE EU	UL USA	cULus Canada USA	CSA Canada	CCC China	GOST Russia	ANCE Mexico	C-tick Australia	ABS American Bureau of Shipping	Lloyd´s Register EMEA	GL Germany
PSR3 ... PSR105											
PSR3 ...PSR105	•	•	•	–	•	•	–	•	–	–	–
PSS18/30...300/215											
PSS18/30 ... PSS72/124	•	•	–	•	•	•	•	•	–	•	–
PSS85/147 ... PSS300/515	•	•	–	•	•	•	•	•	–	–	–
PST30...PSTB1050											
PST30 ... PSTB1050	•	•	–	•	•	•	•	•	•	–	•

• **Standard design approved**, the company labels bear the certification mark when this is required.

Directives and standards

No. 2006/95/EC	Low voltage equipment
No. 2044/108/EC	Electromagnetic compatibility
IEC 60947-1	Low-voltage switchgear and controlgear - Part 1: General rules
IEC 60947-4-2	AC semiconductor motor controllers and starters
UL508	Industrial Control Equipment
CSA C22.2 No 14	Industrial Control Equipment

Softstarters
Type PSR



General information
Designed for motor currents from 3 to 105 A, PSR Softstarters complement the softstarter family from ABB. The PSR Softstarter is compact and easily accessible for installation in places where space is limited thanks to the two-phase controlled design.

The PSR "Compact" Softstarter line
The PSR range comprises four physical sizes with widths from 45 to 70mm, covers rated currents from 3 to 105 A and is available for supply voltages of 24 VDC or 100-240 VAC. All sizes include a Run signal relay while sizes from 25 - 105 A also have an output signal for TOR (Top of Ramp, i.e., full voltage).

Cooling function
Please refer to the **Number of starts per hour** chart on page 6.6.

Installation
The PSR Softstarter is easy to set and operate thanks to the clearly marked settings. All terminals are distinctly marked and easily accessible for cable connection. Both screw and DIN rail mounting are possible (except for D Frame (PSR60 - PSR105).

Flexible communication
PSR can also be remote controlled by bus communication using ABB's FieldBusPlug. The FieldBusPlug accessories are available for several protocols such as Profibus DP and Device Net.

The PSR Softstarter is ideal for the replacement of across the line (ATL) starters and for installation in places with limited space.

UL File #E161428

Selection guide
PSR3 – PSR45





	PSR3 ... PSR16					PSR25 ... PSR30		PSR37 ... PSR45	
Softstarter type	**PSR**	**PSR**	**PSR**	**PSR**	**PSR**	**PSR**	**PSR**	**PSR**	**PSR**
480V, 104°F	**3**	**6**	**9**	**12**	**16**	**25**	**30**	**37**	**45**
Normal start, In Line connected :									
(480 V), hp	2	3	5	7.5	10	15	20	25	30
UL, Max. A	3.4	6.1	9	11	15.2	24.2	28	34	46.2
	Manual motor starter ①								
Recommended size MMS	MS116	MS116	MS116	MS116	MS116	MS325	MS450	MS450	MS450
	Fuse protection 480 V, J Fuse based on UL, max A x 1.75								
Type J fuse minimum rating	6 A	9 A	15 A	20 A	25 A	40 A	50 A	60 A	70 A
	Fused disconnect ①								
Suitable fused disconnect for J fuses.	OS30	OS30	OS30	OS30	OS30	OS60	OS60	OS60	OS100
Type J fuse	10 A	10 A	20 A	20 A	30 A	40 A	50 A	60 A	80 A
Short circuit current rating	85 kA	85 kA	85 kA	85 kA	85 kA	85 kA	85 kA	85 kA	85 kA
The line contactor is not required for the softstarter but is used to open if the OL trips.	**AC-3 rated by-pass** ①								
	A9	A9	A9	A12	A16	A26	A30	A40	A40
The overload relay is always required to protect the motor	**Thermal overload relay** ①								
	TA25DU	TA25DU	TA25DU	TA25DU	TA25DU	TA25DU	TA25DU	TA42DU	TA75DU
The by-pass contact reduces the power loss of the softstarter	**By-pass contact**								
	Built-in	Built-in	Built-in	Built-in	Built-in	Built-in	Built-in	Built-in	Built-in
	Control transformers								
Minimum recommended transformer size	50 VA	50 VA	50 VA	50 VA	50 VA	50 VA	50 VA	50 VA	50 VA
Power consumption at 100-240 V	12 VA	12 VA	12 VA	12 VA	12 VA	12 VA	12 VA	12 VA	12 VA
Power consumption at 24 VDC	5 W	5 W	5 W	5 W	5 W	5 W	5 W	5 W	5 W

① For complete catalog numbers, see the pertinent product section in the 1SXU000023C0202 Product Selector.

Number of starts per hour using PSR softstarters

Motor-current I_e	Starts/hour without auxiliary fan							
	10	**20**	**30**	**40**	**50**	**60**	**80**	**100**
3 A	PSR3							PSR6
6 A	PSR6					PSR9		
9 A	PSR9			PSR12			PSR16	PSR25
12 A	PSR12			PSR16	PSR25		PSR30	
16 A	PSR16	PSR25			PSR30	PSR37		
25 A	PSR25	PSR30	PSR37			PSR45		PSR60
30 A	PSR30	PSR37		PSR45		PSR60		PSR72
37 A	PSR37	PSR45		PSR60		PSR72	PSR85	PSR105
45 A	PSR45		PSR60		PSR72	PSR85	PSR105	-
60 A	PSR60		PSR72	PSR85	PSR105		-	
72 A	PSR72	PSR85	PSR105		-			
85 A	PSR85	PSR105		-				
105 A	PSR105	-						

Starts/hour with auxiliary fan							
10	**20**	**30**	**40**	**50**	**60**	**80**	**100**
PSR3							
PSR6							PSR9
PSR9					PSR12		
PSR12				PSR16	PSR25		
PSR16	PSR25				PSR30		
PSR25	PSR30	PSR37				PSR45	
PSR30	PSR37		PSR45				
PSR37	PSR45				PSR60		
PSR45		PSR60			PSR72		
PSR60		PSR72		PSR85	PSR105	-	
PSR72	PSR85	PSR105		-			
PSR85	PSR105-						
PSR105	-						

Data based on an ambient temperature of 40°, starting current of 4 x I_e and ramp time 6 seconds.

Selection guide
PSR60 – PSR105



PSR60 ...		PSR105	
PSR 60	**PSR 72**	**PSR 85**	**PSR 105**
40 59.4	50 68	60 80	75 104
MS495	MS495	MS495	MS495
90 A	120 A	135 A	170 A
OS125D 100 A 85 kA	OS160D 120 A 85 kA	OS160D 135 A 85 kA	OS160D 170 A 85 kA
A50	A63	A75	A110
TA75DU	TA75DU	TA110DU	TA110DU
Built-in	Built-in	Built-in	Built-in
50 VA 12 VA 5 W	50 VA 12 VA 5 W	50 VA 12 VA 5 W	50 VA 12 VA 5 W

Description

PSR - Compact range, covers motor currents from 3 to 105 A. It is the latest addition to the softstarter family and has an attractive, compact design. Further, the system concept includes MMS and the softstarters are available for remote control connection using the FieldBusPlug as an accessory. All sizes include a Run signal relay, while from sizes 25 A the PSR Softstarters are also provided with an output signal for TOR (Top Of Ramp), i.e. full voltage. With standard performance the PSR Softstarters handle ten starts per hour. When an auxiliary cooling fan is added, the starting capacity is increased to 20 starts per hour or more.

- Current ratings 3.9 – 105 A (1.5 - 55 kW), at 400 V
- Motor voltage 208 – 600 V
- Supply voltage 24 VDC or 100-240 VAC
- Easy to install and adjust
- DIN rail or screw mounting
- Integrated by-pass contacts

With their compact design, the PSR Softstarters are ideal for installation in places where space is limited and where there is a demand for easy installation.

Settings

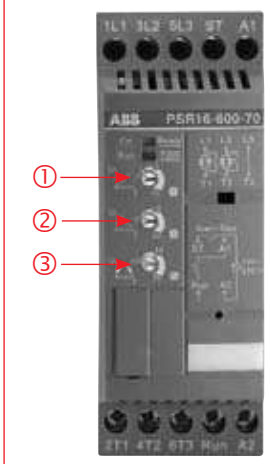

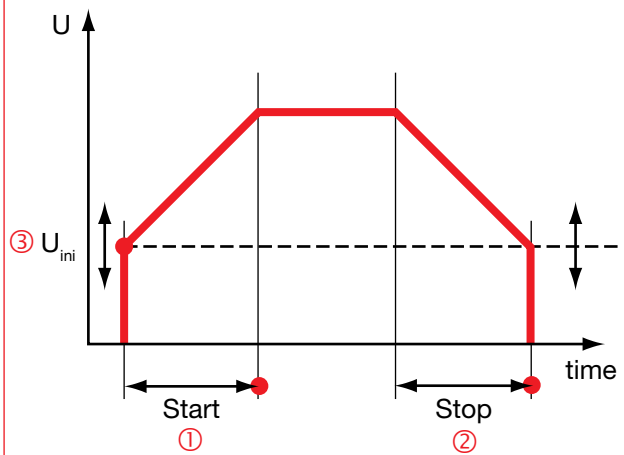

① Ramp time START = 1 ... 20 sec
② Ramp time STOP = 0 ... 20 sec
③ Initial voltage U_{ini} =40 ... 70 % (also set "end voltage")

① See accessories on page 6.8.

PSR3 – PSR105


PSR3 ... PSR16


PSR25 ... PSR30


PSR37 ... PSR45


PSR60 ... PSR105


PSR-FBPA


PSR16-MS116


PSR45-MS450


PSR105-MS495


PSR-FAN


FieldBusPlug

Motor power 208 V P_e HP	Motor power 240 V P_e HP	Motor power 480 V P_e HP	Motor power 600 V P_e HP	UL Max rated motor current, I_e	Reference code	Catalog number	List price
208 - 600 VAC							
Supply voltage, U_S 100-240 VAC							
0.5	0.75	2	2	3.4	1SFA 896 103 R7000	PSR3-600-70	**190**
1	1.5	3	5	6.1	1SFA 896 104 R7000	PSR6-600-70	**225**
2	2	5	7.5	9.0	1SFA 896 105 R7000	PSR9-600-70	**265**
3	3	7.5	10	11.0	1SFA 896 106 R7000	PSR12-600-70	**270**
3	5	10	10	15.2	1SFA 896 107 R7000	PSR16-600-70	**310**
7.5	7.5	15	20	24.2	1SFA 896 108 R7000	PSR25-600-70	**320**
7.5	10	20	25	28.0	1SFA 896 109 R7000	PSR30-600-70	**410**
10	10	25	30	34.0	1SFA 896 110 R7000	PSR37-600-70	**510**
15	15	30	40	46.2	1SFA 896 111 R7000	PSR45-600-70	**640**
20	20	40	50	59.4	1SFA 896 112 R7000	PSR60-600-70	**790**
20	25	50	60	68	1SFA 896 113 R7000	PSR72-600-70	**920**
25	30	60	75	80	1SFA 896 114 R7000	PSR85-600-70	**1,050**
30	40	75	100	104	1SFA 896 115 R7000	PSR105-600-70	**1,280**
Supply voltage, U_S 24 VDC							
0.5	0.75	2	2	3.4	1SFA 896 103 R8100	PSR3-600-81	**190**
1	1.5	3	5	6.1	1SFA 896 104 R8100	PSR6-600-81	**225**
2	2	5	7.5	9.0	1SFA 896 105 R8100	PSR9-600-81	**265**
3	3	7.5	10	11.0	1SFA 896 106 R8100	PSR12-600-81	**270**
3	5	10	10	15.2	1SFA 896 107 R8100	PSR16-600-81	**310**
7.5	7.5	15	20	24.2	1SFA 896 108 R8100	PSR25-600-81	**320**
7.5	10	20	25	28.0	1SFA 896 109 R8100	PSR30-600-81	**410**
10	10	25	30	34.0	1SFA 896 110 R8100	PSR37-600-81	**510**
15	15	30	40	46.2	1SFA 896 111 R8100	PSR45-600-81	**640**
20	20	40	50	59.4	1SFA 896 112 R8100	PSR60-600-81	**790**
20	25	50	60	68	1SFA 896 113 R8100	PSR72-600-81	**920**
25	30	60	75	80	1SFA 896 114 R8100	PSR85-600-81	**1,050**
30	40	75	100	104	1SFA 896 115 R8100	PSR105-600-81	**1,280**

48Accessories

Description	Reference code	Catalog number	List price
Fieldbus plug connection accessory	1SFA 896 312 R1001	PSR-FBPA	**$ 290**
Connection it for PSR3-16 and MS116	1SFA 896 211 R1001	PSR16-MS116	**12**
Connection kit for PSR37-45 and MS450	1SFA 896 213 R1001	PSR45-MS450	**25**
Connection kit for PSR60-105 and MS495	1SFA 896 214 R1001	PSR105-MS495	①
Fan for PSR3-45	1SFA 896 311 R1001	PSR-FAN	**34**
Fan for PSR60-105	1SFA 896 313 R1001	PSR-FAN60-105A	**48**

Catalog number explanation

PSR 3 - 600 - 70

Softstarter
Type PSR

Maximum motor current
when connected in-line

Line voltage
208V - 600 VAC

Control voltage
70 = 100 - 240 VAC
81 = 24 VDC

① Consult factory.

Type PSR
Technical data

Rated insulation voltage, U_i	600 V													
Rated operational voltage, U_e	208...600 V +10 %/-15 %, 50/60 Hz ±5%													
Rated supply voltage, U_s	100...240 VAC or 24 VDC +10 %/-15 %, 50/60 Hz ±5%													
Power consumption,	**PSR3**	**PSR6**	**PSR9**	**PSR12**	**PSR16**	**PSR25**	**PSR30**	**PSR37**	**PSR45**	**PSR60**	**PSR72**	**PSR85**	**PSR105**	
at 100-240 VAC	12 VA	12 VA	12 VA	12 VA	12 VA	12 VA	12 VA	10 VA	10 VA	10 VA	10 VA	10 VA	10 VA	
at 24 VDC	5 W	5 W	5 W	5 W	5 W	5 W	5 W	5 W	5 W	5 W	5 W	5 W	5 W	
Rated operational current I_r	**PSR3**	**PSR6**	**PSR9**	**PSR12**	**PSR16**	**PSR25**	**PSR30**	**PSR37**	**PSR45**	**PSR60**	**PSR72**	**PSR85**	**PSR105**	
	3.9 A	6.8 A	9 A	12 A	16 A	25 A	30 A	37 A	45 A	60 A	72 A	85 A	105 A	
Starting capacity at I_r	4 x I_r for 6 sec.													
Number of starts per hour,														
standard	10 (4 x I_e during 6 s) See table on page 6.6 for details.													
with aux. fan	>20 (4 x I_e during 6 s)													
Service factor	100 %													
Ambient temperature														
during operation ①	-25 °C to +60 °C													
during storage	-40 °C to +70 °C													
Maximum altitude ②	4000 m													
Degree of protection,	**PSR3**	**PSR6**	**PSR9**	**PSR12**	**PSR16**	**PSR25**	**PSR30**	**PSR37**	**PSR45**	**PSR60**	**PSR72**	**PSR85**	**PSR105**	
main circuit	IP20	IP20	IP20	IP20	IP20	IP20	IP20	IP10	IP10	IP10	IP10	IP10	IP10	
control circuit	IP20	IP20	IP20	IP20	IP20	IP20	IP20	IP20	IP20	IP20	IP20	IP20	IP20	
Connectable cable area,	**PSR3 - PSR16**					**PSR25 - PSR30**		**PSR37 - PSR45**			**PSR60 - PSR105**			
main circuit	1 x 0.75 - 2.5 mm²					1 x 2.5 - 10 mm²		1 x 6 - 35 mm²			1 x 10 - 95 mm²			
	2 x 0.75 - 2.5 mm²					2 x 2.5 - 10 mm²		2 x 6 - 16 mm²			2 x 6 - 35 mm²			
	PSR3 - PSR16					**PSR25 - PSR105**								
control circuit	1 x 0.75 - 2.5 mm²					1 x 0.75 - 2.5 mm²								
	2 x 0.75 - 2.5 mm²					2 x 0.75 - 1.5 mm²								
Signal relays	**PSR3 - PSR16**					**PSR25 - PSR105**								
for Run signal														
Resistive load	240 V, 2 A					250 V, 5 A								
AC-15 (Contactor)	240 V, 0.5 A					250 V, 0.5 A								
for Top of Ramp signal														
Resistive load	-					250 V, 2 A								
AC-15 (Contactor)	-					250 V, 0.5 A								
LED for On/Ready	Green													
for Run/Top Of Ramp	Green													
Settings Ramp time during start	1-20 sec.													
Ramp time during stop	0-20 sec.													
Initial- and End Voltage	40-70%													

① Above 40 °C up to max. 60 °C reduce the rated current with 0.8 % per °C.

② When used at high altitudes above 1000 meters up to 4000 meters you need to derate the rated current using the following formula.

$$[\ \%\ \text{of}\ I_e = 100 - \frac{x - 1000}{150}\ ]$$

x = actual altitude for the softstarter

UL ratings

Softstarter	480 V	Motor power P (hp) and full load current FLA (A)				Max. fuse
	FLA	U_e 200 V/208 V	U_e 220 V/240 V	U_e 440 V/480 V	U_e 550 V/600V	
Type	A	hp	hp	hp	hp	A, Type
PSR3	3.4	0.5	0.75	2	2	10 A J-Type
PSR6	6.1	1	1.5	3	5	10 A J-Type
PSR9	9	2	2	5	7.5	20 A J-Type
PSR12	11	3	3	7.5	10	20 A J-Type
PSR16	15.2	3	5	10	10	30 A J-Type
PSR25	24.2	7.5	7.5	15	20	40 A J-Type
PSR30	28	7.5	10	20	25	50 A J-Type
PSR37	34	10	10	25	30	60 A J-Type
PSR45	46.2	15	15	30	40	80 A J-Type
PSR60	52	20	20	40	50	100 A J-Type
PSR72	65	20	25	50	60	125 A J-Type
PSR85	77	25	30	60	75	150 A J-Type
PSR105	96	30	40	75	100	200 A J-Type

Approximate dimensions
PSR3 – PSR105

PSR3 ... 16

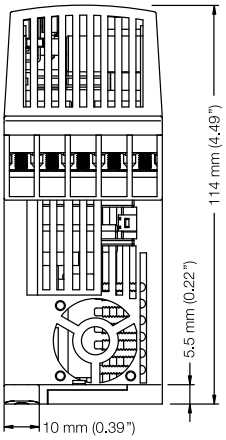

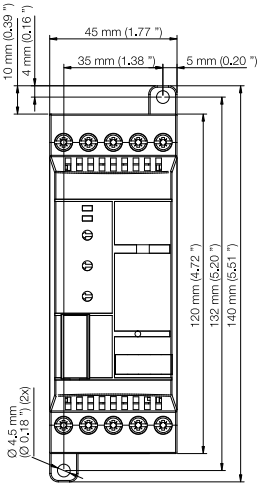

PSR37 ... 45

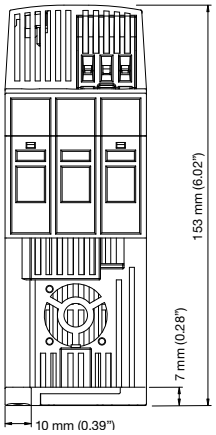

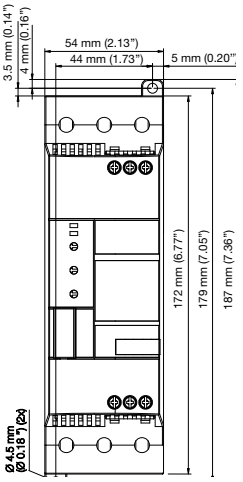

PSR60 ... 105

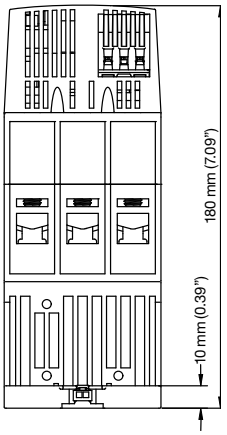

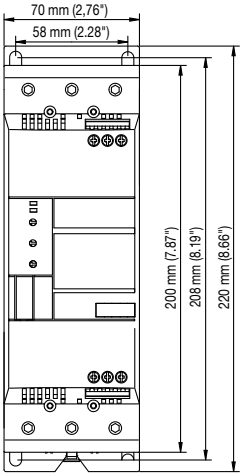

PSR25 ... 30

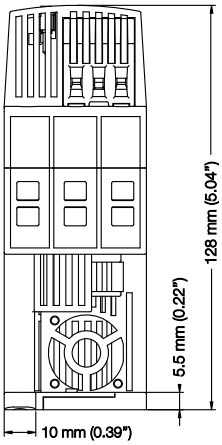

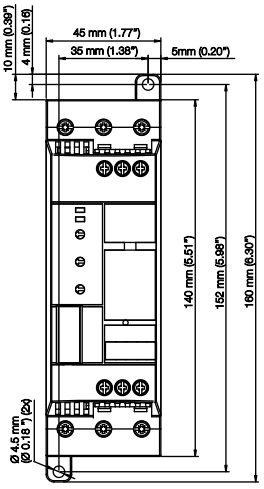

Minimum distance to wall/front

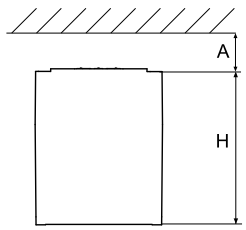

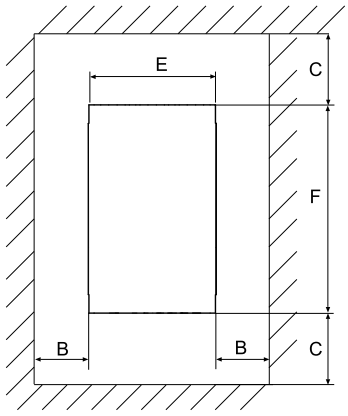

Softstarter, type	Dimensions A	B	C	E	F	H
PSR3 ... PSR105						
PSR3 ... 16	25	0*	0	45	140	114
PSR25 ... 30	25	0*	0	45	160	128
PSR37 ... 45	25	0*	0	54	187	153
PSR60 ... 105	25	0*	0	70	220	180

Circuit diagrams
PSR3 – PSR105

PSR3 ...16

A) With MCCB

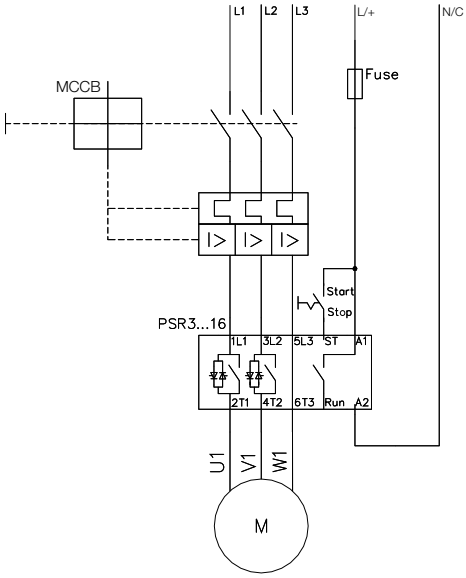

B) With MCCB and auxiliary contact

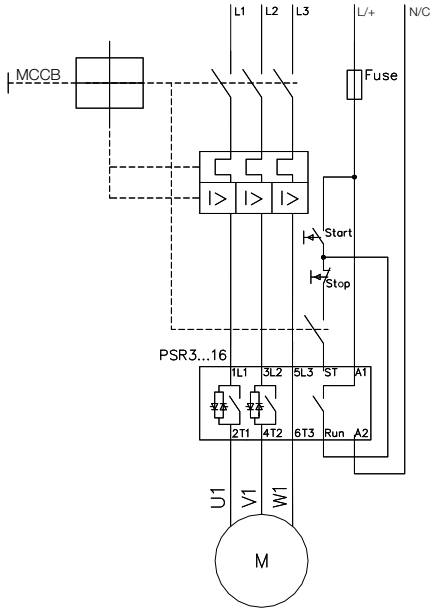

C) With fuses, contactor and O.L.

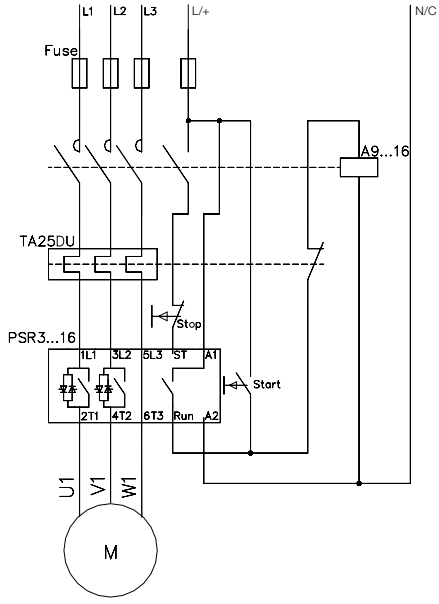

PSR25 ... 45

D) With MCCB

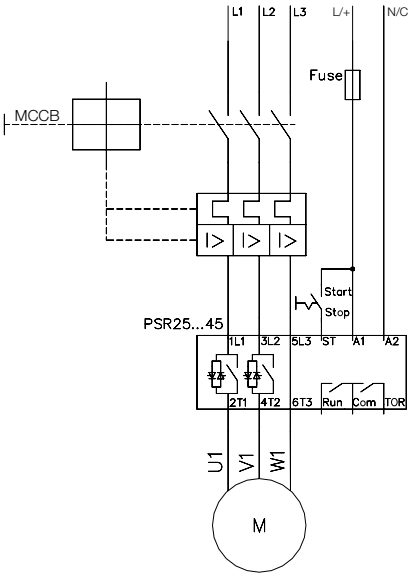

E) With MCCB and auxiliary contact

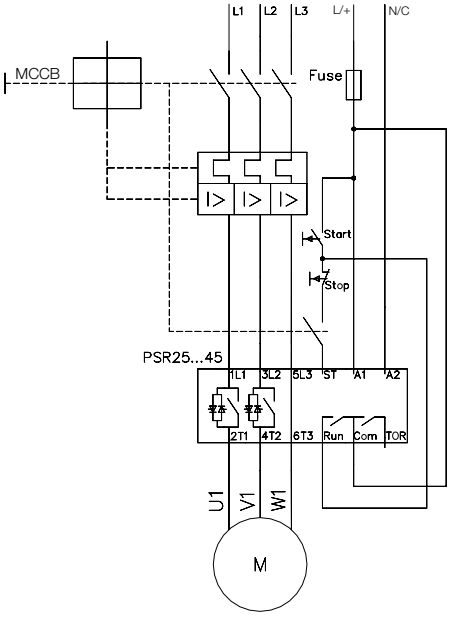

F) With fuses, contactor and O.L.

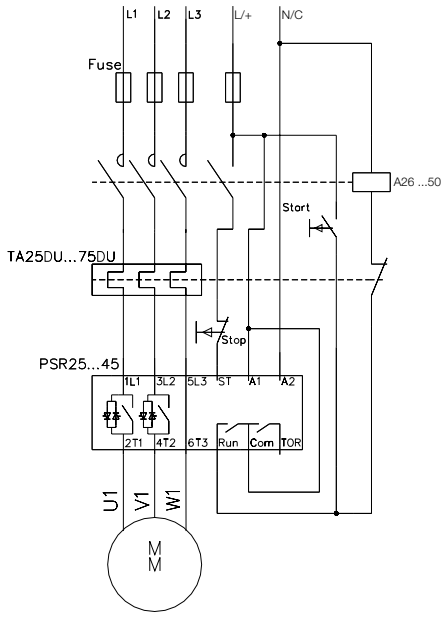

Notes