TI01445T/09/EN/04.23-00
71610049
2023-03-30

Technical Information
iTHERM ModuLine TM111

Trend-setting, robust and modular thermometer for direct measurement, for use in a wide range of industrial applications



Easy-to-use metric version with superior RTD or TC sensor technology.
Direct installation without a thermowell

Application

- For universal use
- Measuring range: −200 to +1 100 °C (−328 to +2 012 °F)
- Pressure range: up to 75 bar (1 088 psi)

Head transmitter

Endress+Hauser transmitters are available with enhanced accuracy and reliability compared to directly wired sensors. With a choice of the following outputs and communication protocols, they are easily customized to your measuring task:

- Analog output 4 to 20 mA, HART®
  HART® SIL transmitter, optional
- PROFIBUS® PA, FOUNDATION Fieldbus™
- PROFINET® with Ethernet-APL

Your benefits

- User-friendly and reliable from product selection to maintenance
- iTHERM inserts: globally unique, automated production. Full traceability and consistently high product quality for reliable measured values
- iTHERM QuickSens: fastest response times of 1.5 sfor optimum process control
- iTHERM StrongSens: unsurpassed vibration resistance (> 60g) for ultimate plant safety
- International certification: explosion protection according to ATEX, IECEx, CSA and NEPSI
- Bluetooth® connectivity (optional)

Endress+Hauser
People for Process Automation

Table of contents

Function and system design 3
iTHERM ModuLine - thermometer for general applications 3
Measuring principle 3
Measuring system 4
Modular design 5

Input 7
Measured variable 7
Measuring range 7

Output 7
Output signal 7
Family of temperature transmitters 7

Power supply 8
Terminal assignment 8
Cable entries 10
Overvoltage protection 14

Performance characteristics 15
Reference conditions 15
Maximum measured error 15
Influence of ambient temperature 15
Self heating 16
Response time 16
Calibration 16
Insulation resistance 17

Installation 17
Orientation 17
Installation instructions 18

Environment 18
Ambient temperature range 18
Storage temperature 18
Humidity 18
Climate class 18
Degree of protection 18
Shock and vibration resistance 19
Electromagnetic compatibility (EMC) 19

Process 19
Process temperature range 19
Process pressure range 19

Mechanical construction 19
Design, dimensions 19
Weight 22
Material 22
Process connections 24
Inserts 26
Surface roughness 26
Terminal heads 26

Certificates and approvals 32
Test on thermowell 32
MID 32

Ordering information 32

Accessories 32
Service-specific accessories 32

Supplementary documentation 33

Function and system design

iTHERM ModuLine - thermometer for general applications

This thermometer is part of the product line of modular thermometers for industrial applications.

Differentiating factors when selecting a suitable thermometer

Direct contact

Version with thermowell

Advanced technology

"Advanced" thermometers offer cutting-edge technology with features such as a replaceable insert, quick-fastening extension neck (iTHERM QuickNeck), vibration-resistant and fast-response sensor technology (iTHERM StrongSens and QuickSens) and safety features like approvals for use in hazardous areas, second process seal "Dual Seal" or SIL thermometers

TM111 advanced

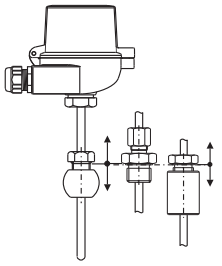

A0038281

TM131 advanced

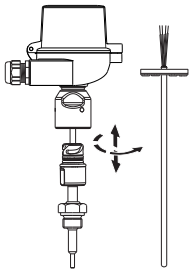

A0038195

Basic technology

"Basic" thermometers are characterized by basic sensor technology and are a low-cost alternative to thermometers with cutting-edge technology. The insert is not always replaceable. Application only in the non-hazardous area.

TM101 basic

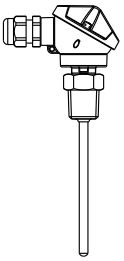

A0039102

TM121 basic

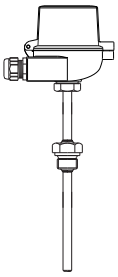

A0038194

Measuring principle

Resistance thermometer (RTD)

These resistance thermometers use a Pt100 temperature sensor according to IEC 60751. The temperature sensor is a temperature-sensitive platinum resistor with a resistance of 100 Ω at 0 °C (32 °F) and a temperature coefficient α = 0.003851 °C^{-1}.

There are generally two different kinds of platinum resistance thermometers:

- **Wire wound (WW):** Here, a double coil of fine, high-purity platinum wire is located in a ceramic support. This is then sealed top and bottom with a ceramic protective layer. Such resistance thermometers not only facilitate very reproducible measurements but also offer good long-term stability of the resistance/temperature characteristic within temperature ranges up to 600 °C (1 112 °F). This type of sensor is relatively large in size and it is comparatively sensitive to vibrations.
- **Thin film platinum resistance thermometers (TF):** A very thin, ultrapure platinum layer, approx. 1 µm thick, is vaporized in a vacuum on a ceramic substrate and then structured photolithographically. The platinum conductor paths formed in this way create the measuring resistance. Additional covering and passivation layers are applied and reliably protect the thin platinum layer from contamination and oxidation, even at high temperatures.

The primary advantages of thin film temperature sensors over wire wound versions are their smaller sizes and better vibration resistance. A relatively low principle-based deviation of the resistance/temperature characteristic from the standard characteristic of IEC 60751 can frequently be observed among TF sensors at high temperatures. As a result, the tight limit values of tolerance category A as per IEC 60751 can only be observed with TF sensors at temperatures up to approx. 300 °C (572 °F).

Thermocouples (TC)

Thermocouples are comparatively simple, robust temperature sensors which use the Seebeck effect for temperature measurement: if two electrical conductors made of different materials are connected at a point, a weak electrical voltage can be measured between the two open conductor ends if the conductors are subjected to a thermal gradient. This voltage is called thermoelectric voltage or electromotive force (emf.). Its magnitude depends on the type of conducting materials and the temperature difference between the "measuring point" (the junction of the two conductors) and the "cold junction" (the open conductor ends). Accordingly, thermocouples primarily only measure differences in temperature. The absolute temperature at the measuring point can be determined from these if the associated temperature at the cold junction is known or is measured separately and compensated for. The material combinations and associated thermoelectric voltage/temperature characteristics of the most common types of thermocouple are standardized in the IEC 60584 and ASTM E230/ANSI MC96.1 standards.

Measuring system

Endress+Hauser offers a complete portfolio of optimized components for the temperature measuring point – everything you need for the seamless integration of the measuring point into the overall facility. This includes:

- Power supply unit/barrier
- Display units
- Overvoltage protection

For more information, see the brochure "System Components - Solutions for a Complete Measuring Point" (FA00016K)

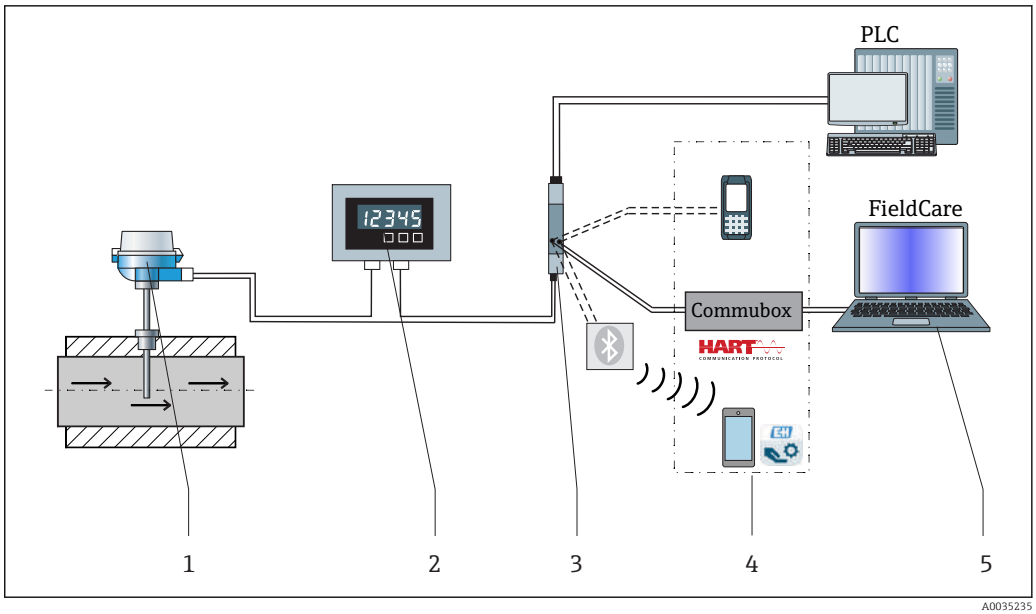

1 *Example of application, measuring point layout with additional Endress+Hauser components*

1 *Installed iTHERM thermometer with HART® communication protocol*
2 *RIA15 loop powered process display - It is integrated in the current loop and displays the measuring signal or HART® process variables in digital form. The process display unit does not require an external power supply. It is powered directly from the current loop. More information on this can be found in the Technical Information, see "Documentation".*
3 *Active barrier RN42 - The RN42 (17.5 V_{DC}, 20 mA) active barrier has a galvanically isolated output for supplying voltage to loop-powered transmitters. The universal power supply works with an input supply voltage of 24 to 230 V AC/DC, 0/50/60 Hz, which means that it can be used in all international power grids. More information on this can be found in the Technical Information, see "Documentation".*
4 *Communication examples: HART® Communicator (handheld terminal), FieldXpert, Commubox FXA195 for intrinsically safe HART® communication with FieldCare via the USB interface, Bluetooth® technology with SmartBlue App.*
5 *FieldCare is a FDT-based plant asset management tool from Endress+Hauser, for details see section "accessories".*

Modular design

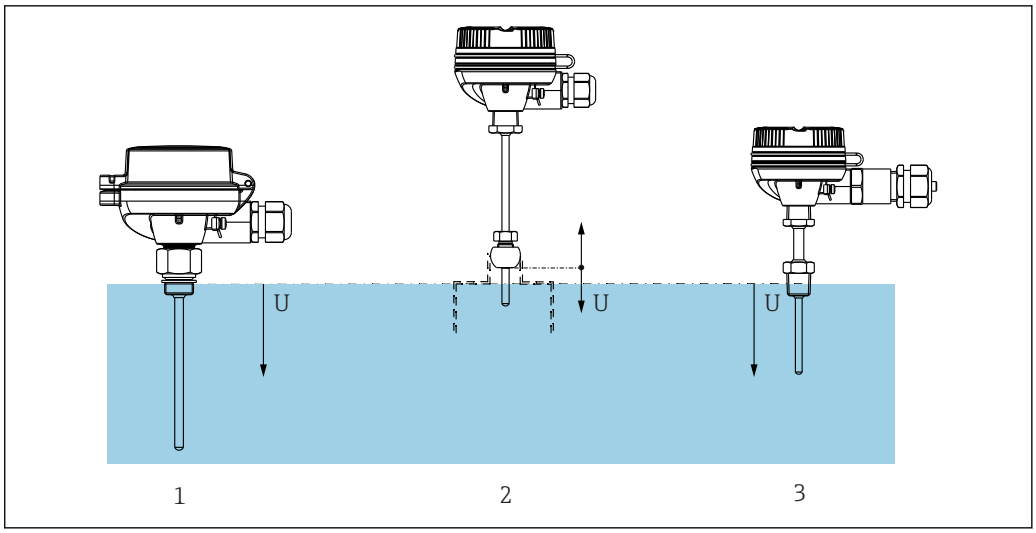

2 *The thermometer is designed for direct process installation.*

1 *Threaded process connection without lagging*
2 *Weld-in adapter, spherical or cylindrical version*
3 *With extension neck and threaded process connection*

Construction		Options
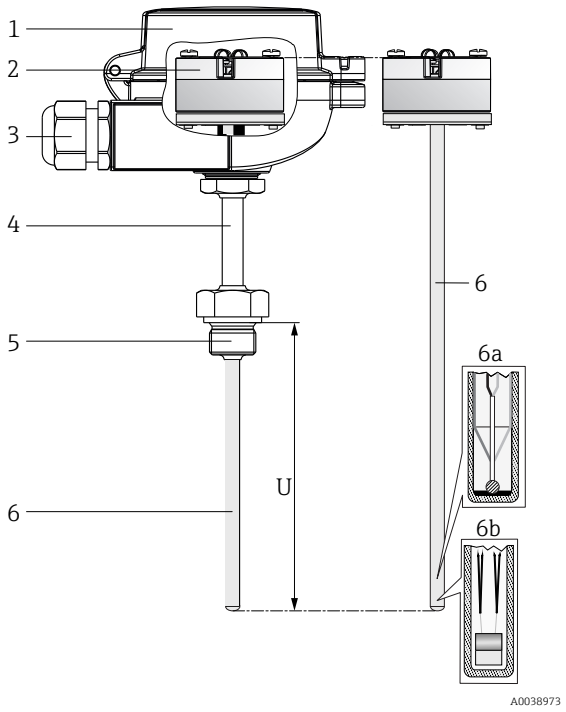	1: Terminal head	Variety of terminal heads made of aluminum, polyamide or stainless steel **Your benefits:** ▪ Optimum terminal access thanks to low housing edge of bottom section: ▪ Easier to use ▪ Lower installation and maintenance costs ▪ Optional display: local process display for added reliability
	2: Wiring, electrical connection, output signal	▪ Ceramic terminal block ▪ Flying leads ▪ Head transmitter (4 to 20 mA, HART®, PROFINET® with Ethernet-APL, PROFIBUS® PA, FOUNDATION™ Fieldbus), single-channel or two-channel ▪ Attachable display
	3: Plug or cable gland	▪ PROFIBUS® plug PA/FOUNDATION™ Fieldbus/PROFINET®, 4-pin ▪ 8-pin plug ▪ Polyamide or brass cable glands
	4: Lagging	Different options are available for the lagging ▪ Without extension (versions without fixed process connection) ▪ Defined extension (minimum available extension for fixed process connections) ▪ Extension welded in place (selectable lengths)
	5: Process connection	Variety of process connections including threads, cap nuts and compression fittings
	6: Insert 6a: iTHERM QuickSens 6b: iTHERM StrongSens	The sheath of the insert is in direct contact with the process medium and does not have to be inserted into a thermowell. The process connection is welded to the insert. The insert is not replaceable and not spring-loaded. However, if a compression fitting is used as the process connection, the insert can be replaced. Sensor models: RTD - wire wound (WW), thin-film sensor (TF) or thermocouples type K, J or N. Insert diameter Ø3 mm (⅛ in) or Ø6 mm (¼ in), depending on thermowell tip or selected thermometer **Your benefits:** ▪ **iTHERM QuickSens** - insert with the world's fastest response time: ▪ Insert: Ø3 mm (⅛ in) or Ø6 mm (¼ in) ▪ Fast, highly accurate measurements, delivering maximum process safety and control ▪ Quality and cost optimization ▪ Minimization of necessary immersion length: better product protection thanks to improved process flow ▪ **iTHERM StrongSens** - insert with unbeatable durability: ▪ Vibration resistance > 60g: lower life cycle costs thanks to longer operating life and high plant availability ▪ Automated, traceable production: top quality and maximum process safety ▪ High long-term stability: reliable measured values and high level of system safety

Input

Measured variable

Temperature (temperature-linear transmission behavior)

Measuring range

Depends on the type of sensor used

Sensor type	Measuring range
Pt100 thin-film	−50 to +400 °C (−58 to +752 °F)
Pt100 thin-film, iTHERM StrongSens, vibration-resistant > 60g	−50 to +500 °C (−58 to +932 °F)
Pt100 thin-film, iTHERM QuickSens, fast-response	−50 to +200 °C (−58 to +392 °F)
Pt100 wire wound, extended measuring range	−200 to +600 °C (−328 to +1 112 °F)
Thermocouple TC, type J	−40 to +750 °C (−40 to +1 382 °F)
Thermocouple TC, type K	−40 to +1 100 °C (−40 to +2 012 °F)
Thermocouple TC, type N	

Output

Output signal

Generally, the measured value can be transmitted in one of two ways:

- Directly-wired sensors - sensor measured values forwarded without a transmitter.
- By selecting the corresponding Endress+Hauser iTEMP temperature transmitter via all common protocols. All the transmitters listed below are mounted directly in the terminal head and wired with the sensory mechanism.

Family of temperature transmitters

Thermometers fitted with iTEMP transmitters are an installation-ready complete solution to improve temperature measurement by significantly increasing accuracy and reliability, when compared to direct wired sensors, as well as reducing both wiring and maintenance costs.

4 to 20 mA head transmitters
They offer a high degree of flexibility, thereby supporting universal application with low inventory storage. The iTEMP transmitters can be configured quickly and easily at a PC. Endress+Hauser offers free configuration software which can be downloaded from the Endress+Hauser Website.

HART® head transmitters
The transmitter is a 2-wire device with one or two measuring inputs and one analog output. The device not only transfers converted signals from resistance thermometers and thermocouples, it also transfers resistance and voltage signals using HART® communication. Swift and easy operation, visualization and maintenance using universal configuration software like FieldCare, DeviceCare or FieldCommunicator 375/475. Integrated Bluetooth® interface for the wireless display of measured values and configuration via E+H SmartBlue (app), optional.

PROFIBUS® PA head transmitters
Universally programmable head transmitter with PROFIBUS® PA communication. Conversion of various input signals into digital output signals. High accuracy over the complete ambient temperature range. PROFIBUS PA functions and device-specific parameters are configured via fieldbus communication.

FOUNDATION Fieldbus™ head transmitters
Universally programmable head transmitter with FOUNDATION Fieldbus™ communication. Conversion of various input signals into digital output signals. High accuracy over the complete ambient temperature range. All transmitters are approved for use in all the main distributed control systems. The integration tests are performed in Endress+Hauser's 'System World'.

Head transmitter with PROFINET® and Ethernet-APL
The temperature transmitter is a 2-wire device with two measuring inputs. The device not only transfers converted signals from resistance thermometers and thermocouples, it also transfers resistance and voltage signals using the PROFINET® protocol. Power is supplied via the 2-wire

Ethernet connection according to IEEE 802.3cg 10Base-T1. The transmitter can be installed as an intrinsically safe electrical apparatus in Zone 1 hazardous areas. The device can be used for instrumentation purposes in the terminal head form B (flat face) according to DIN EN 50446.

Advantages of the iTEMP transmitters:
- Dual or single sensor input (optionally for certain transmitters)
- Attachable display (optionally for certain transmitters)
- Unsurpassed reliability, accuracy and long-term stability in critical processes
- Mathematical functions
- Monitoring of the thermometer drift, sensor backup functionality, sensor diagnostic functions
- Sensor-transmitter-matching for dual-channel transmitters, based on the Callendar van Dusen coefficients (CvD).

Power supply

The sensor connection wires are equipped with terminal lugs. The nominal diameter of a lug is 1.3 mm (0.05 in)

Terminal assignment

Type of sensor connection RTD

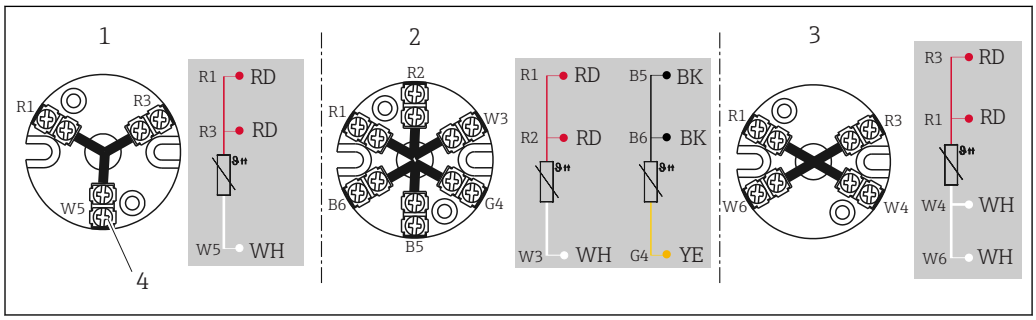

A0045453

3 *Terminal block mounted*

1 *3-wire, single*
2 *2 x 3-wire, single*
3 *4-wire, single*
4 *Outside screw*

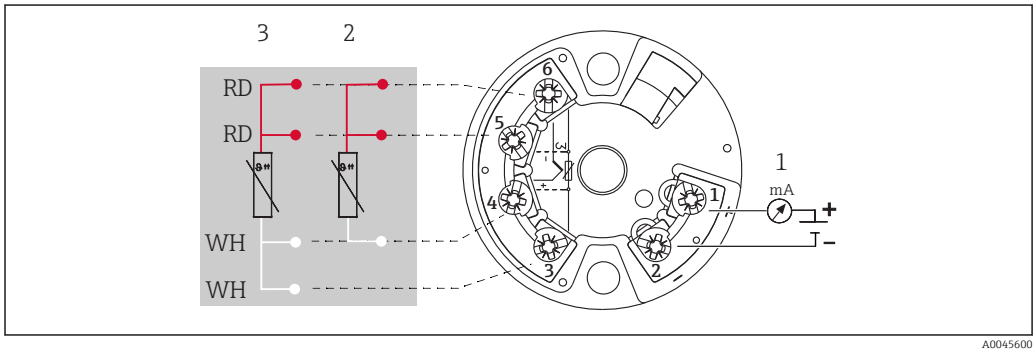

A0045600

4 *Head mounted transmitter TMT18x (single input)*

1 *Power supply head transmitter and analog output 4 to 20 mA or fieldbus connection*
2 *RTD, 3-wire*
3 *RTD, 4-wire*

Only available with screw terminals

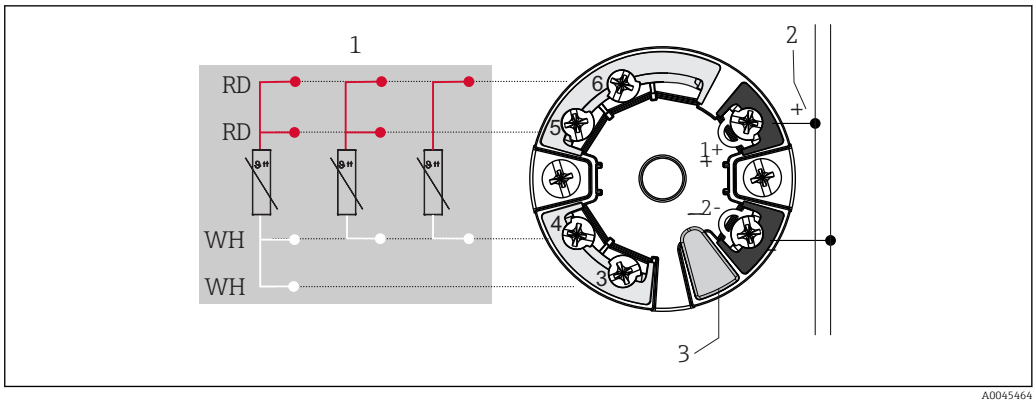

5 *Head mounted transmitter TMT7x or TMT31 (single input)*

1 Sensor input, RTD and Ω: 4-, 3- and 2-wire
2 Power supply or fieldbus connection
3 Display connection/CDI interface

Fitted with spring terminals if screw terminals are not explicitly selected or a double sensor is installed

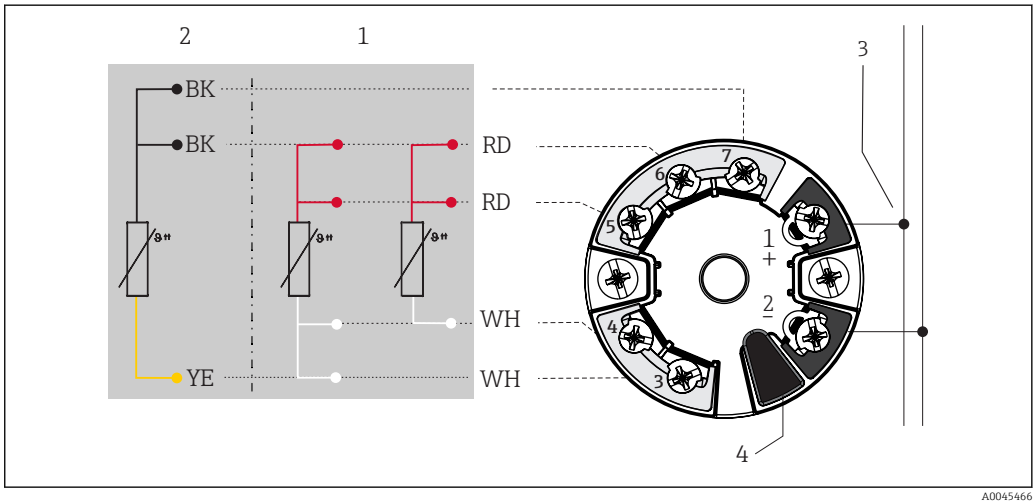

6 *Head mounted transmitter TMT8x (dual input)*

1 Sensor input 1, RTD: 4- and 3-wire
2 Sensor input 2, RTD: 3-wire
3 Power supply or fieldbus connection
4 Display connection

Fitted with spring terminals if screw terminals are not explicitly selected or a double sensor is installed.

Type of sensor connection thermocouple (TC)

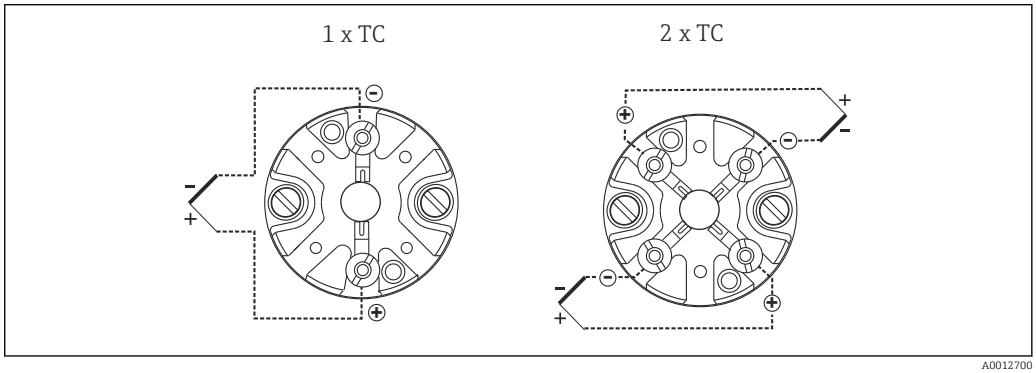

7 *Terminal block mounted*

Head mounted transmitter TMT18x (single sensor input) [1]	Head mounted transmitter TMT8x (dual sensor input) [2]
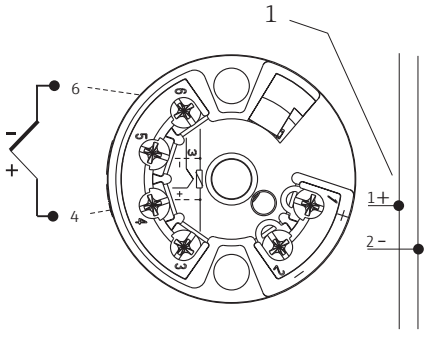 *1 Power supply, head transmitter and analog output 4 to 20 mA or fieldbus communication*	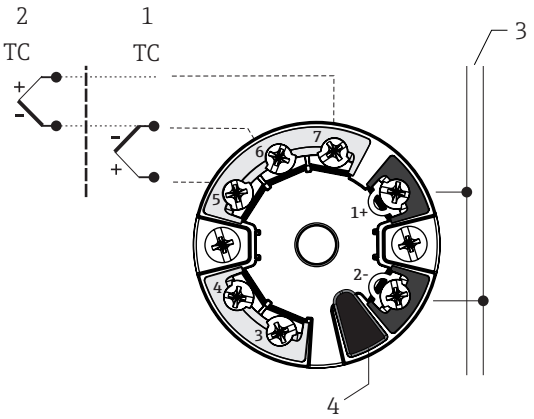 *1 Sensor input 1* *2 Sensor input 2* *3 Fieldbus communication and power supply* *4 Display connection*
Head mounted transmitter TMT7x (single sensor input) [2]	
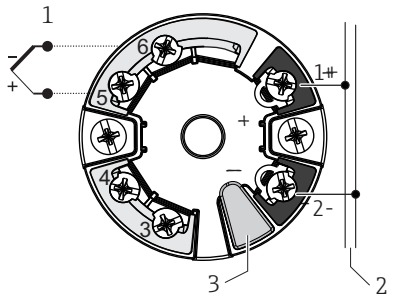 *1 Sensor input TC, mV* *2 Power supply, bus connection* *3 Display connection/CDI interface*	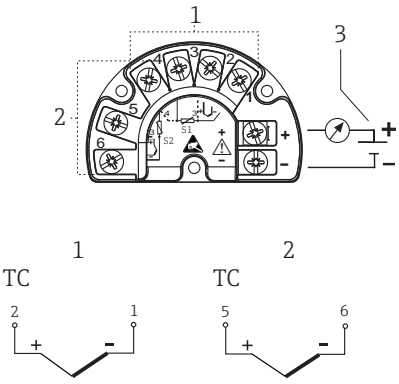 *1 Sensor input 1* *2 Sensor input 2 (not TMT142B)* *3 Supply voltage for field transmitter and analog output 4 to 20 mA or fieldbus communication*

1) Fitted with screw terminals
2) Fitted with spring terminals if screw terminals are not explicitly selected or a double sensor is installed.

Thermocouple wire colors

As per IEC 60584	As per ASTM E230
▪ Type J: black (+), white (-) ▪ Type K: green (+), white (-) ▪ Type N: pink (+), white (-)	▪ Type J: white (+), red (-) ▪ Type K: yellow (+), red (-) ▪ Type N: orange (+), red (-)

Cable entries

See "Terminal heads" section

The cable entries must be selected during the configuration of the device. Different terminal heads offer different possibilities with regard to threads and the number of available cable entries.

Connectors

Endress+Hauser offers a wide variety of connectors for the simple and fast integration of the thermometer into a process control system. The following tables show the PIN assignments of the various plug connector combinations.

We do not recommend connecting thermocouples directly to connectors. The direct connection to the pins of the plug might generate a new 'thermocouple' which influences the accuracy of the measurement. Therefore we do not connect thermocouples directly to connectors. The thermocouples are connected in combination with a transmitter.

Abbreviations

#1	Order: first transmitter/insert	#2	Order: second transmitter/insert
i	Insulated. Wires marked 'i' are not connected and are insulated with heat shrink tubes.	YE	Yellow
GND	Grounded. Wires marked 'GND' are connected to the internal grounding screw in the terminal head.	RD	Red
BN	Brown	WH	White
GNYE	Green-yellow	PK	Pink
BU	Blue	GN	Green
GY	Gray	BK	Black

Terminal head with one cable entry

Plug	**1x PROFIBUS PA**								**1x FOUNDATION™ Fieldbus (FF)**				**1x PROFINET and Ethernet-APL**			
Plug thread	M12				7/8"				7/8"				M12			
PIN number	1	2	3	4	1	2	3	4	1	2	3	4	1	2	3	4
Electrical connection (terminal head)																
Flying leads and TC	Not connected (not insulated)															
3-wire terminal block (1x Pt100)	RD	RD	WH		RD	RD	WH		RD	RD	WH		RD	RD	WH	
4-wire terminal block (1x Pt100)			WH	WH			WH	WH			WH	WH			WH	WH
6-wire terminal block (2x Pt100)	RD (#1) [1]	RD (#1)	WH (#1)		RD (#1)	RD (#1)	WH (#1)		RD (#1)	RD (#1)	WH (#1)				WH (#1)	
1x TMT 4 to 20 mA or HART®	+	i	-	i	+	i	-	i	+	i	-	i	+	i	-	i
2x TMT 4 to 20 mA or HART® in the terminal head with a high cover	+(#1)	+(#2)	-(#1)	-(#2)	+(#1)	+(#2)	-(#1)	-(#2)	+(#1)	+(#2)	-(#1)	-(#2)	+(#1)	+(#2)	-(#1)	-(#2)
1x TMT PROFIBUS® PA	+	i	-	GND [2]	+	i	-	GND [2]	Cannot be combined							
2x TMT PROFIBUS® PA	+(#1)		-(#1)		+		-									
1x TMT FF	Cannot be combined				Cannot be combined				-	+	GND	i	Cannot be combined			
2x TMT FF									-(#1)	+(#1)						
1x TMT PROFINET®									Cannot be combined				APL signal -	APL signal +	GND	i

Plug	1x PROFIBUS PA		1x FOUNDATION™ Fieldbus (FF)	1x PROFINET and Ethernet-APL			
2x TMT PROFINET®				APL signal - (#1)	APL signal + (#1)		
PIN position and color code	 A0018929 1 BN 2 GNYE 3 BU 4 GY	 A0018930 1 BN 2 GNYE 3 BU 4 GY	 A0018931 1 BU 2 BN 3 GY 4 GNYE	 A0052119 1 RD 2 GN			

1) Second Pt100 is not connected
2) If using a head without a grounding screw, e.g. plastic housing TA30S or TA30P, insulated 'i' instead of grounded GND

Terminal head with one cable entry (continued)

Plug	4-pin / 8-pin							
Plug thread	M12							
PIN number	1	2	3	4	5	6	7	8
Electrical connection (terminal head)								
Flying leads and TC	Not connected (not insulated)							
3-wire terminal block (1x Pt100)	RD	RD	WH		i			
4-wire terminal block (1x Pt100)			WH	WH				
6-wire terminal block (2x Pt100)			WH		BK	BK	YE	
1x TMT 4 to 20 mA or HART®	+(#1)	i	-(#1)	i	i			
2x TMT 4 to 20 mA or HART® in the terminal head with a high cover					+(#2)	i	-(#2)	i
1x TMT PROFIBUS® PA	Cannot be combined							
2x TMT PROFIBUS® PA								
1x TMT FF	Cannot be combined							
2x TMT FF								
1x TMT PROFINET®	Cannot be combined							
2x TMT PROFINET®	Cannot be combined							
PIN position and color code	 A0018929 1 BN 2 GNYE 3 BU 4 GY *8 4-pin plug*				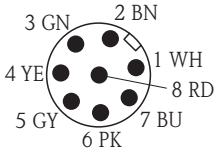 A0018927 *9 8-pin plug*			

Terminal head with two cable entries

Plug	2x PROFIBUS® PA								2x FOUNDATION™ Fieldbus (FF)				2x PROFINET and Ethernet-APL			
Plug thread  A0021706	M12(#1) / M12(#2)				7/8"(#1)/7/8"(#2)				7/8"(#1)/7/8"(#2)				M12 (#1)/M12 (#2)			
PIN number	1	2	3	4	1	2	3	4	1	2	3	4	1	2	3	4

Plug	2x PROFIBUS® PA								2x FOUNDATION™ Fieldbus (FF)				2x PROFINET and Ethernet-APL			
Electrical connection (terminal head)																
Flying leads and TC	Not connected (not insulated)															
3-wire terminal block (1x Pt100)	RD/i	RD/i	WH/i		RD/i	RD/i	WH/i		RD/i	RD/i	WH/i		RD/i	RD/i	WH/i	
4-wire terminal block (1x Pt100)			WH/i	WH/i			WH/i	WH/i			WH/i	WH/i			WH/i	WH/i
6-wire terminal block (2x Pt100)	RD/BK	RD/BK	WH/YE		RD/BK	RD/BK	WH/YE		RD/BK	RD/BK	WH/YE		RD/BK	RD/BK	WH/YE	
1x TMT 4 to 20 mA or HART®	+/i	i/i	-/i	i/i	+/i	i/i	-/i	i/i	+/i	i/i	-/i	i/i	+/i	i/i	-/i	i/i
2x TMT 4 to 20 mA or HART® in the terminal head with a high cover	+ (#1)/ + (#2)		- (#1)/ -(#2)		+ (#1)/ + (#2)		- (#1)/ -(#2)		+ (#1)/ + (#2)		- (#1)/ -(#2)		+ (#1)/ +(#2)		- (#1)/ -(#2)	
1x TMT PROFIBUS® PA	+/i		-/i	GND/ GND	+/i		-/i	GND/ GND	Cannot be combined							
2x TMT PROFIBUS® PA	+ (#1)/ + (#2)		- (#1)/ -(#2)		+ (#1)/ + (#2)		- (#1)/ -(#2)									
1x TMT FF	Cannot be combined				Cannot be combined				-/i	+/i	i/i	GND/ GND	Cannot be combined			
2x TMT FF									- (#1)/ -(#2)	+ (#1)/ + (#2)						
1x TMT PROFINET®	Cannot be combined				Cannot be combined				Cannot be combined				APL signal -	APL signal +	GND	i
2x TMT PROFINET®	Cannot be combined				Cannot be combined				Cannot be combined				APL signal - (#1) and (#2)	APL signal + (#1) and (#2)		
PIN position and color code	 1 BN 2 GNYE 3 BU 4 GY A0018929				 1 BN 2 GNYE 3 BU 4 GY A0018930				 1 BU 2 BN 3 GY 4 GNYE A0018931				 1 RD 2 GN A0052119			

Terminal head with two cable entries (continued)

Plug	4-pin / 8-pin							
Plug thread 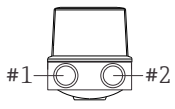 A0021706	M12 (#1)/M12 (#2)							
PIN number	1	2	3	4	5	6	7	8

Electrical connection (terminal head)				
Flying leads and TC	Not connected (not insulated)			
3-wire terminal block (1x Pt100)	RD/i	RD/i	WH/i	i/i

<table>
<tr><th>Plug</th><th colspan="5">4-pin / 8-pin</th></tr>
<tr><td>4-wire terminal block (1x Pt100)</td><td></td><td></td><td>WH/i</td><td>WH/i</td><td rowspan="4"></td></tr>
<tr><td>6-wire terminal block (2x Pt100)</td><td>RD/BK</td><td>RD/BK</td><td colspan="2">WH/YE</td></tr>
<tr><td>1x TMT 4 to 20 mA or HART®</td><td>+/i</td><td rowspan="2">i/i</td><td>-/i</td><td rowspan="2">i/i</td></tr>
<tr><td>2x TMT 4 to 20 mA or HART® in the terminal head with a high cover</td><td>+(#1)/ +(#2)</td><td>-(#1)/-(#2)</td></tr>
<tr><td>1x TMT PROFIBUS® PA</td><td colspan="5" rowspan="2">Cannot be combined</td></tr>
<tr><td>2x TMT PROFIBUS® PA</td></tr>
<tr><td>1x TMT FF</td><td colspan="5" rowspan="2">Cannot be combined</td></tr>
<tr><td>2x TMT FF</td></tr>
<tr><td>1x TMT PROFINET®</td><td colspan="5">Cannot be combined</td></tr>
<tr><td>2x TMT PROFINET®</td><td colspan="5">Cannot be combined</td></tr>
<tr><td>PIN position and color code</td><td colspan="3">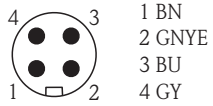

10 4-pin plug</td><td colspan="2">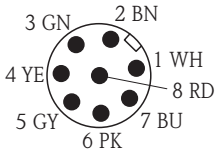

11 8-pin plug</td></tr>
</table>

Connection combination: insert - transmitter

Insert	Transmitter connection [1]			
	TMT180/TMT7x		TMT8x	
	1x 1-channel	2x 1-channel	1x 2-channel	2x 2-channel
1x sensor (Pt100 or TC), flying leads	Sensor (#1) : transmitter (#1)	Sensor (#1) : transmitter (#1) (Transmitter (#2) not connected)	Sensor (#1) : transmitter (#1)	Sensor (#1) : transmitter (#1) Transmitter (#2) not connected
2x sensor (2x Pt100 or 2x TC), flying leads	Sensor (#1) : transmitter (#1) Sensor (#2) insulated	Sensor (#1) : transmitter (#1) Sensor (#2): transmitter (#2)	Sensor (#1) : transmitter (#1) Sensor (#2): transmitter (#1)	Sensor (#1) : transmitter (#1) Sensor (#2): transmitter (#1) (Transmitter (#2) not connected)
1x sensor (Pt100 or TC),with terminal block [2]	Sensor (#1) : transmitter in cover	Cannot be combined	Sensor (#1) : transmitter in cover	Cannot be combined
2x sensor (2x Pt100 or 2x TC) with terminal block	Sensor (#1) : transmitter in cover Sensor (#2) not connected		Sensor (#1) : transmitter in cover Sensor (#2): transmitter in cover	

1) If 2 transmitters are selected in a terminal head, transmitter (#1) is installed directly on the insert. Transmitter (#2) is installed in the high cover. A TAG cannot be ordered for the 2nd transmitter as standard. The bus address is set to the default value and, if necessary, must be changed manually before commissioning.
2) Only in the terminal head with a high cover, only 1 transmitter possible. A ceramic terminal block is automatically fitted on the insert.

Overvoltage protection

To protect against overvoltage in the power supply and signal/communication cables for the thermometer electronics, Endress+Hauser offers the HAW562 surge arrester for DIN rail mounting and the HAW569 for field housing installation.

For more information see the Technical Information "HAW562 Surge arrester" TI01012K and "HAW569 Surge arrester" TI01013K.

Performance characteristics

Reference conditions

These data are relevant for determining the accuracy of the temperature transmitters used. More information on this can be found in the Technical Information of the iTEMP temperature transmitters.

Maximum measured error

RTD assembly as per IEC 60751

Class	Max. tolerances (°C)	Characteristics
RTD maximum sensor error		
Cl. A	± (0.15 + 0.002 · |t| [1])	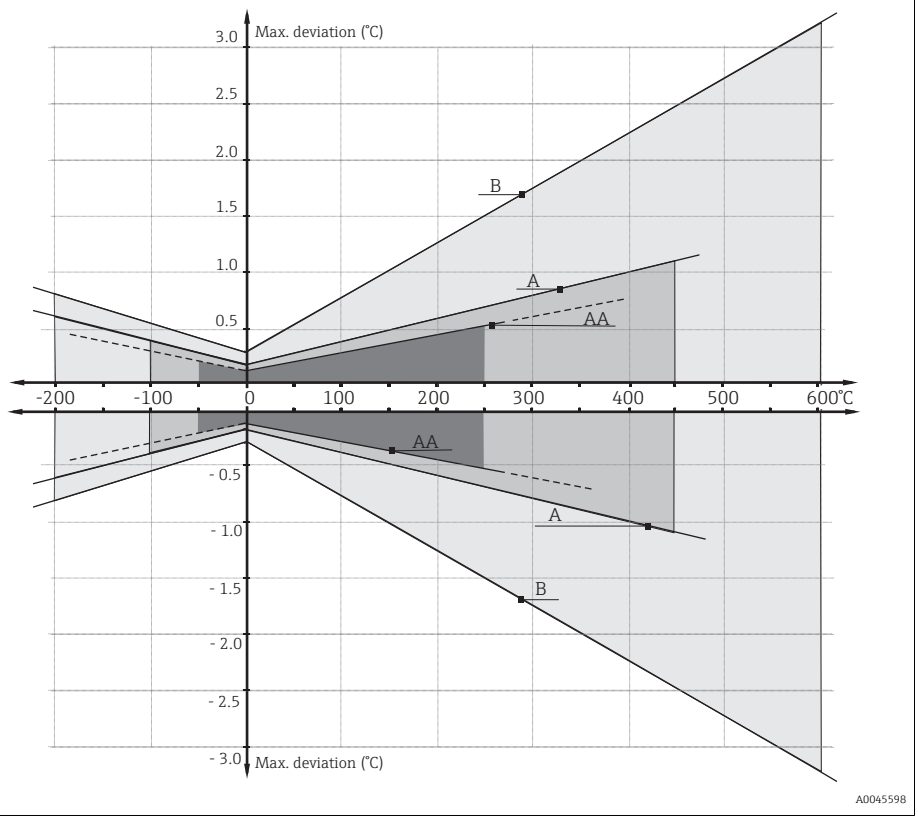
Cl. AA, formerly 1/3 Cl. B	± (0.1 + 0.0017 · |t|) [1]	
Cl. B	± (0.3 + 0.005 · |t| [1])	

1) |t| = absolute temperature value in °C

In order to obtain the maximum tolerances in °F, the results in °C must be multiplied by a factor of 1.8.

Temperature ranges

Sensor type	Operating temperature range	Class A	Class AA
Pt100 (TF) iTHERM StrongSens	−50 to +500 °C (−58 to +932 °F)	−30 to +300 °C (−22 to +572 °F)	0 to 200 °C (−58 to +392 °F)
iTHERM QuickSens	−50 to 200 °C (−58 to 392 °F)	−50 to 200 °C (−58 to 392 °F)	0 to 150 °C (32 to 302 °F)
Thin-film sensor (TF)	−50 to 400 °C (−58 to 752 °F)	−50 to 250 °C (−58 to 482 °F)	0 to 100 °C (32 to 212 °F)
Wire wound sensor (WW)	−200 to 600 °C (−328 to 1 112 °F)	−200 to 600 °C (−328 to 1 112 °F)	−50 to 250 °C (−58 to 482 °F)

Influence of ambient temperature

Depends on the head transmitter used. For details, see the Technical Information.

Self heating

RTD elements are passive resistors that are measured using an external current. This measurement current causes a self-heating effect in the RTD element itself, which in turn creates an additional measurement error. In addition to the measurement current, the size of the measurement error is also affected by the temperature conductivity and flow velocity of the process. This self-heating error is negligible when an Endress+Hauser iTEMP temperature transmitter (very small measurement current) is connected.

Response time

Tests have been performed in water at 0.4 m/s (according to IEC 60751) and with a 10 K temperature step change.

Standard Pt100, typical values	t_{50}	t_{90}
Direct contact: TF, WW 3 or 6 mm diameter	5 s	11 s
iTHERM QuickSens	0.5 s	1.5 s

Type J, K, N (TC), typical values	t_{50}	t_{90}
Direct contact 3 or 6 mm diameter	2.5 s	7 s

Calibration

Calibration of thermometers

Calibration involves comparing the measured values of a device under test (DUT) with those of a more precise calibration standard using a defined and reproducible measurement method. The aim is to determine the deviation of the DUT's measured values from the true value of the measured variable. Two different methods are used for thermometers:

- Calibration at fixed-point temperatures, e.g. at the freezing point of water at 0 °C,
- Calibration compared against a precise reference thermometer.

The thermometer to be calibrated must display the fixed point temperature or the temperature of the reference thermometer as accurately as possible. Temperature-controlled calibration baths with very homogeneous thermal values, or special calibration furnaces into which the DUT and the reference thermometer, where necessary, can project to a sufficient degree, are typically used for thermometer calibrations. The measurement uncertainty can increase due to heat dissipation errors and short immersion lengths. The existing measurement uncertainty is listed on the individual calibration certificate. For accredited calibrations according to ISO17025, the measurement uncertainty shouldn't be twice as high as the accredited measurement uncertainty. If this is exceeded, only a factory calibration can be performed.

Evaluation of thermometers

If a calibration with an acceptable uncertainty of measurement and transferable measurement results is not possible, Endress+Hauser offers customers a thermometer evaluation measurement service, if technically feasible. This is the case when:

- The process connections/flanges are too big or the immersion length (IL) is too short to allow the DUT to be immersed sufficiently in the calibration bath or furnace (see the following table), or
- Due to heat conduction along the thermometer tube, the resulting sensor temperature generally deviates significantly from the actual bath/furnace temperature.

The measured value of the DUT is determined using the maximum possible immersion depth and the specific measuring conditions and measurement results are documented on an evaluation certificate.

Sensor-transmitter matching

The resistance/temperature curve of platinum resistance thermometers is standardized but in practice it is rarely possible to keep to the values precisely over the entire operating temperature range. For this reason, platinum resistance sensors are divided into tolerance classes, such as Class A, AA or B as per IEC 60751. These tolerance classes describe the maximum permissible deviation of the specific sensor characteristic curve from the standard curve, i.e. the maximum temperature-dependent characteristic error that is permitted. The conversion of measured sensor resistance values to temperatures in temperature transmitters or other meter electronics is often susceptible to considerable errors as the conversion is generally based on the standard characteristic curve.

When using temperature transmitters from Endress+Hauser, this conversion error can be reduced significantly by sensor-transmitter matching:
- Calibration at three temperatures at least and determination of the actual temperature sensor characteristic curve,
- Adjustment of the sensor-specific polynomial function using Calendar-van Dusen (CvD) coefficients,
- Configuration of the temperature transmitter with the sensor-specific CvD coefficients for resistance/temperature conversion, and
- another calibration of the reconfigured temperature transmitter with connected resistance thermometer.

Endress+Hauser offers this kind of sensor-transmitter matching as a separate service. Furthermore, the sensor-specific polynomial coefficients of platinum resistance thermometers are always provided on every Endress+Hauser calibration certificate where possible, e.g. at least three calibration points, so that users themselves can also appropriately configure suitable temperature transmitters.

For the device, Endress+Hauser offers standard calibrations at a reference temperature of −80 to +600 °C (−112 to +1 112 °F) based on the ITS90 (International Temperature Scale). Calibrations in other temperature ranges are available from your Endress+Hauser sales center on request. Calibrations are traceable to national and international standards. The calibration certificate is referenced to the serial number of the device. Only the insert is calibrated.

Minimum insertion length (IL) for inserts required to perform a correct calibration

Due to restrictions of the furnace geometries, minimum immersion lengths must be maintained at high temperatures in order to be able to perform a calibration with acceptable measurement uncertainty. The same applies when a temperature head transmitter is used. Due to the heat dissipation, minimum immersion lengths must be maintained in order to ensure the functionality of the transmitter −40 to +85 °C (−40 to +185 °F).

Calibration temperature	Minimum immersion length (IL) in mm without head transmitter
−196 °C (−320.8 °F)	120 mm (4.72 in) [1]
−80 to 250 °C (−112 to 482 °F)	No minimum immersion length needed [2]
251 to 550 °C (483.8 to 1022 °F)	300 mm (11.81 in)
551 to 600 °C (1023.8 to 1 112 °F)	400 mm (15.75 in)

1) With TMT a minimum of 150 mm (5.91 in) is required
2) At a temperature of +80 to +250 °C (+176 to +482 °F) with TMT a minimum of50 mm (1.97 in) is required

Insulation resistance

- RTD:
  Insulation resistance according to IEC 60751 > 100 MΩ at 25 °C between terminals and sheath material measured with a minimum test voltage of 100 V DC
- TC:
  Insulation resistance according to IEC 1515 between terminals and sheath material with a test voltage of 500 V DC:
  - > 1 GΩ at 20 °C
  - > 5 MΩ at 500 °C

Installation

Orientation

No restrictions. However, self-draining in the process should be guaranteed depending on the application.

Installation instructions

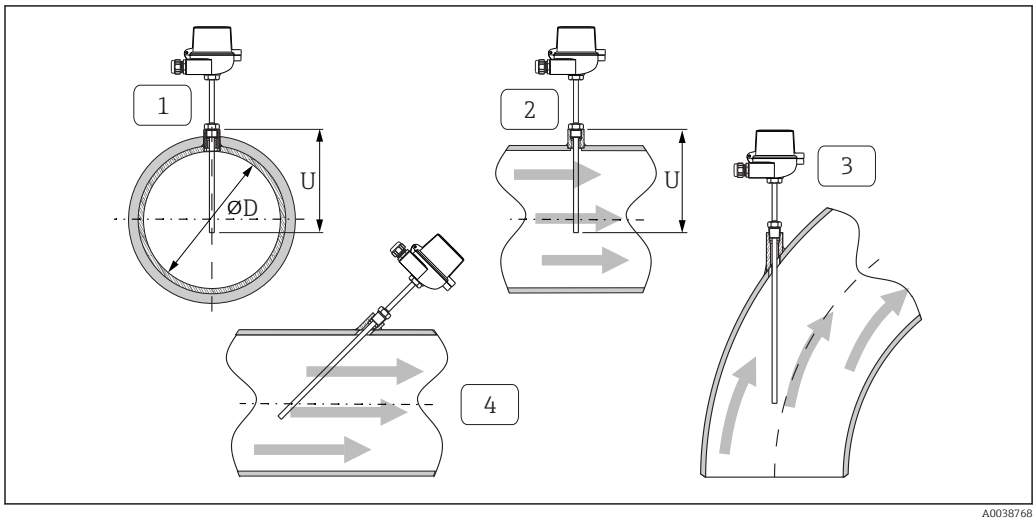

12 Installation examples

1 - 2 In pipes with a small cross-section, the sensor tip should reach or extend slightly past the center axis of the pipe (=U).
3 - 4 Slanted orientation.

The immersion length of the thermometer influences the accuracy. If the immersion length is too small, errors in the measurement are caused by heat conduction via the process connection and the container wall. Therefore, if installing in a pipe the immersion length should be at least half the pipe diameter. Installation at an angle (see 3 and 4) could be another solution. When determining the immersion length or installation depth all the parameters of the thermometer and of the process to be measured must be taken into account (e.g. flow velocity, process pressure).

The counterparts for process connections and seals are not supplied with the thermometer and must be ordered separately if needed.

Environment

Ambient temperature range

Terminal head	Temperature in °C (°F)
Without mounted head transmitter	Depends on the terminal head used and the cable gland or fieldbus connector, see 'Terminal heads' section
With mounted head transmitter	−40 to 85 °C (−40 to 185 °F)
With mounted head transmitter and display	−20 to 70 °C (−4 to 158 °F)

Storage temperature

For information, see the ambient temperature above.

Humidity

Depends on the transmitter used. If Endress+Hauser iTEMP head transmitters are used:
- Condensation permitted as per IEC 60 068-2-33
- Max. rel. humidity: 95% as per IEC 60068-2-30

Climate class

As per EN 60654-1, Class C

Degree of protection

Max. IP 66 (NEMA Type 4x encl.)	Depends on the design (terminal head, connector, etc.)
Partly IP 68	Tested in 1.83 m (6 ft) over 24 h

Shock and vibration resistance

The Endress+Hauser inserts exceed the IEC 60751 requirements stating a shock and vibration resistance of 3g within a range of 10 to 500 Hz. The vibration resistance of the measurement point depends on the sensor type and design. See the following table:

Sensor type	Vibration resistance for the sensor tip
Pt100 (WW)	> 30 m/s² (3g)
Pt100 (TF), basic	
Pt100 (TF)	> 40 m/s² (4g)
iTHERM StrongSens Pt100 (TF) iTHERM QuickSens Pt100 (TF), version: Ø6 mm (0.24 in)	> 600 m/s² (60g)
Thermocouple inserts	> 30 m/s² (3g)

Electromagnetic compatibility (EMC)

Depends on the head transmitter used. For details see the Technical Information.

Process

Process temperature range

Depends on the type of sensor and material used, maximum −200 to +1 100 °C (−328 to +2 012 °F).

Process pressure range

Pressure range:
- Max. 75 bar (1 088 psi) to +200 °C (+392 °F) for standard thin-film and iTHERM QuickSens Pt100 sensors.
- Max. 50 bar (725 psi) to +400 °C (+752 °F) for all other sensor types.

The maximum possible process pressure depends on various influencing factors, such as the design, process connection and process temperature. For information on the maximum possible process pressures for the individual process connections, see the 'Process connection' section.

It is possible to calculate the permitted flow rate according to DIN 43772 for thermometers with a thermowell. A calculation is not standardized and not usual for thermometers without a thermowell. If there are any concerns regarding the mechanical loading capacity of the device, the use of a thermometer with a thermowell is recommended.

Mechanical construction

Design, dimensions

All dimensions in mm (in). The design of the thermometer depends on the general design version used.

Various dimensions, such as the immersion length U for example, are variable values and are therefore indicated as items in the following dimensional drawings.

Variable dimensions:

Position	Description
IL	Insertion length of insert
T	Length of lagging: variable or predefined, depends on thermowell version (see also the individual table data)
U	Immersion length: variable, depending on the configuration

Position	Description
Hd, SL	Variable for calculating the insertion length of the insert, depending on different screw-in lengths in terminal head thread M24x1.5 or ½" NPT, see insert length calculation (IL). 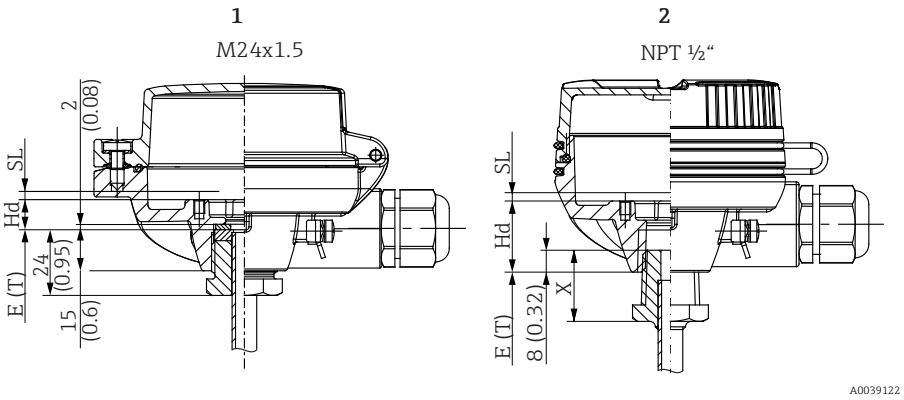 *13 Different screw-in lengths in terminal head thread for M24x1.5 and ½" NPT* *1 Metric thread M24x1.5* *2 Conical thread NPT ½"* *Hd Distance in terminal head* *SL Spring travel*
ØID	Insert diameter: 3 mm (0.12 in) or 6 mm (0.24 in)

Thermometer without fixed process connection

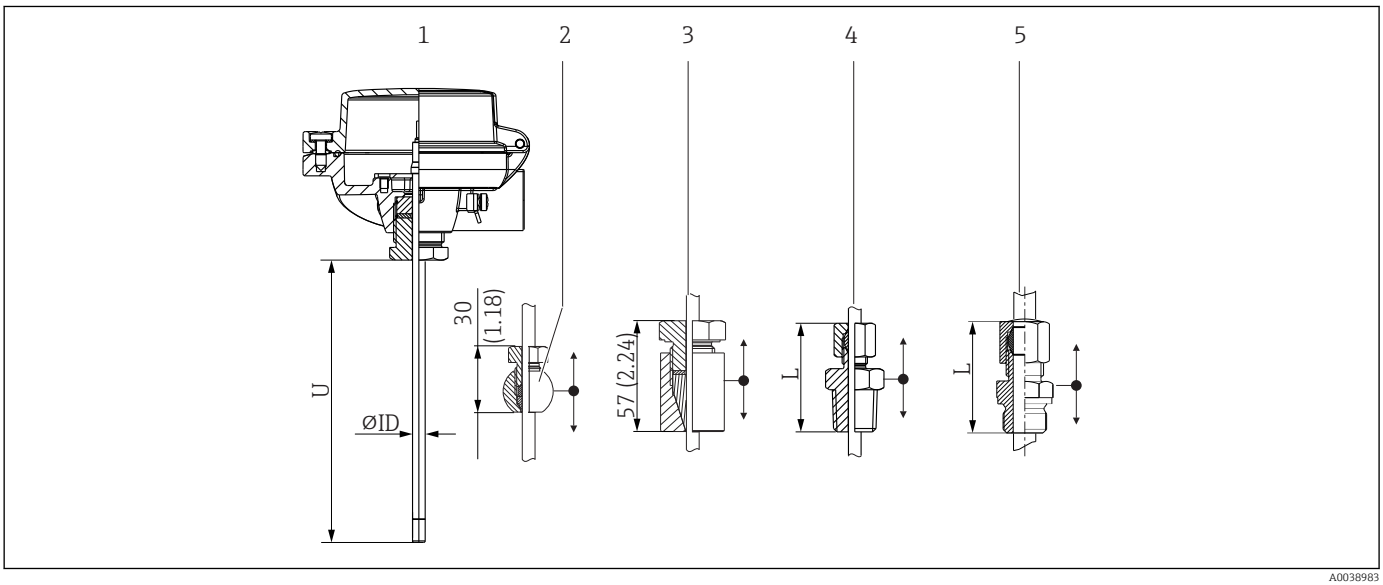

1 Without process connection
2 Thermometer with spherical, movable TK40 compression fitting for weld-in application
3 Thermometer with cylindrical, movable TK40 compression fitting for weld-in application
4 With compression fitting NPT thread, spring loaded version as option
5 With compression fitting G thread, spring loaded version as option

The versions with an M24 thread to the terminal head use a replaceable TS111 insert. All other versions do not have a replaceable insert.

Type of compression fitting	L	U_{min} (with use of compression fitting)
NPT thread, not spring loaded	51 mm (2.0 in)	≥ 70 mm (2.76 in)
G thread, not spring loaded	47 mm (1.85 in)	
G- or NPT-thread, spring loaded	60 mm (2.36 in)	

Thermometer with fixed process connection

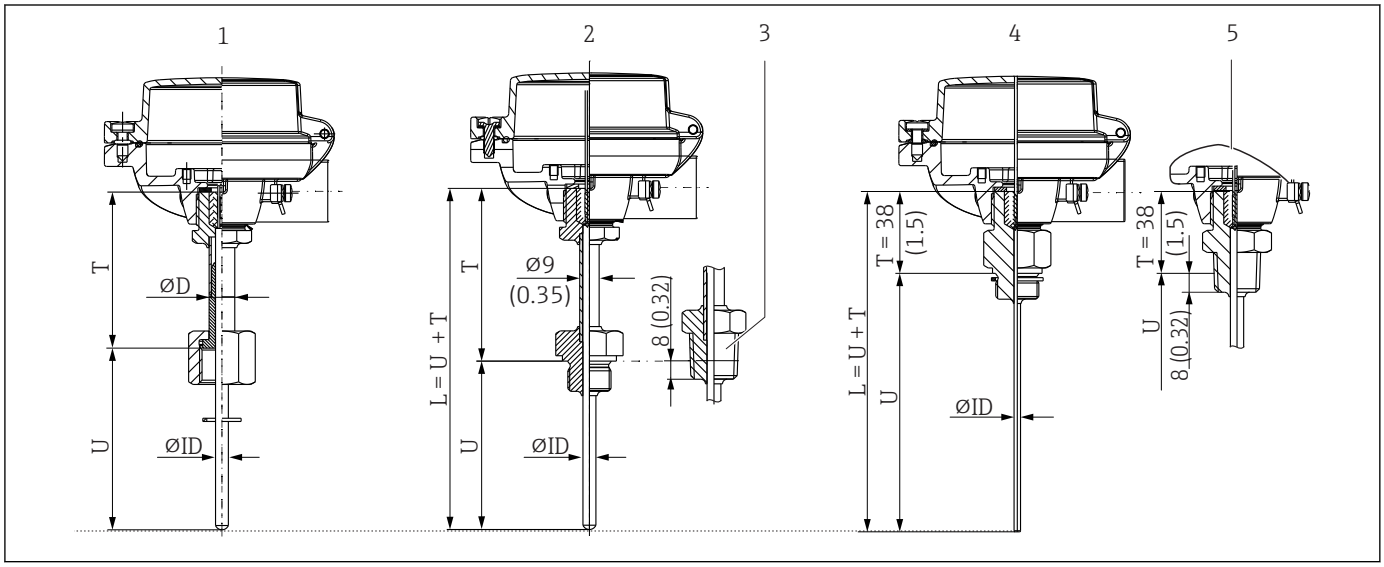

A0038974

1 With lagging and cap nut, female thread, available in G½" and G¾", ØD = 9 mm (0.35 in) or 12 mm (0.47 in)
2 With lagging, G- or M-thread version
3 With lagging, NPT-thread version
4 Without lagging, terminal head process connection, M- or G-thread version
5 Without lagging, terminal head process connection, NPT-thread version

The versions do not have a replaceable insert. The insert is not spring-loaded even if the cap nut is used.

Minimum length definition

Thermometer version	U	T
1	▪ ≥ 50 mm (1.97 in) for sensor type iTHERM QuickSens ▪ ≥ 40 mm (1.57 in) for all other sensor types	≥ 85 mm (3.35 in)
2+3		
4+5		38 mm (1.5 in)

As illustrated in the following figure, the lagging length may influence the temperature in the terminal head. This temperature must remain within the limit values defined in the "Operating conditions" section.

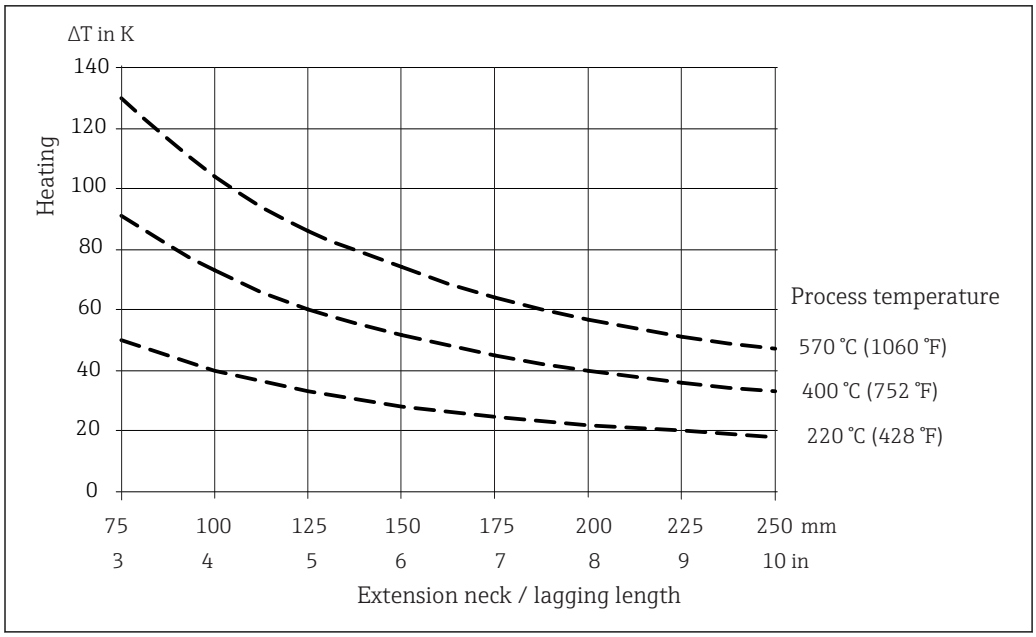

14 *Heating of the terminal head as a function of the process temperature. Temperature in terminal head = ambient temperature 20 °C (68 °F)+ ΔT*

The diagram can be used to calculate the transmitter temperature.

Example: At a process temperature of 220 °C (428 °F) and with a lagging length of 100 mm (3.94 in), the heat conduction is 40 K (72 °F). The transmitter temperature is therefore 40 K (72 °F) plus the ambient temperature, e.g. 25 °C (77 °F): 40 K (72 °F) + 25 °C (77 °F) = 65 °C (149 °F).

Result: The temperature of the transmitter is OK; the length of the lagging is sufficient.

Weight

0.5 to 2.5 kg (1 to 5.5 lbs) for standard options.

Material

The temperatures for continuous operation specified in the following table are only intended as reference values for use of the various materials in air and without any significant compressive load. The maximum operating temperatures can be reduced considerably in cases where abnormal conditions such as high mechanical load occur or in aggressive media.

Please be aware, the maximum temperature is always also depending on the used temperature sensor!

Material name	Short form	Recommended max. temperature for continuous use in air	Properties
AISI 316L/1.4401	X5CrNiMo 17-12-2	650 °C (1 202 °F) [1]	▪ Austenitic, stainless steel ▪ High corrosion resistance in general ▪ Particularly high corrosion resistance in chlorine-based and acidic, non-oxidizing atmospheres through the addition of molybdenum (e.g. phosphoric and sulfuric acids, acetic and tartaric acids with a low concentration)
AISI 316L/1.4404 1.4435	X2CrNiMo17-12-2 X2CrNiMo18-14-3	650 °C (1 202 °F) [1]	▪ Austenitic, stainless steel ▪ High corrosion resistance in general ▪ Particularly high corrosion resistance in chlorine-based and acidic, non-oxidizing atmospheres through the addition of molybdenum (e.g. phosphoric and sulfuric acids, acetic and tartaric acids with a low concentration) ▪ Increased resistance to intergranular corrosion and pitting ▪ Compared to 1.4404, 1.4435 has even higher corrosion resistance and a lower delta ferrite content
Alloy600/2.4816	NiCr15Fe	1 100 °C (2 012 °F)	▪ A nickel/chromium alloy with very good resistance to aggressive, oxidizing and reducing atmospheres, even at high temperatures ▪ Resistance to corrosion caused by chlorine gases and chlorinated media as well as many oxidizing mineral and organic acids, sea water etc. ▪ Corrosion from ultrapure water ▪ Not to be used in sulfur-containing atmospheres

1) Can be used to a limited extent up to 800 °C (1472 °F) for low compressive loads and in non-corrosive media. Please contact your Endress+Hauser sales team for further information.

Process connections

Threaded process connection

Type	Version		Dimensions		Technical properties
			Thread length TL in mm (in)	Width across flats AF	
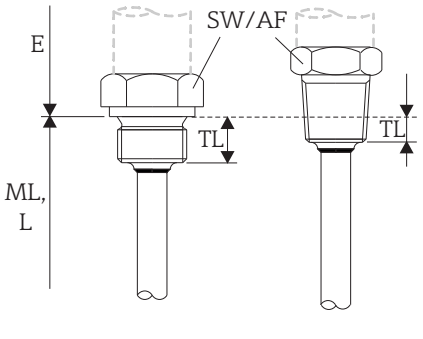 *15 Cylindrical (left side) and conical (right side) version*	M	M20x1.5	14 mm (0.55 in)	27	▪ $P_{max.}$ = 75 bar (1088 psi) to +200 °C (+392 °F) for standard thin-film and iTHERM QuickSens Pt100 sensors. ▪ $P_{max.}$ = 50 bar (725 psi) to +400 °C (+752 °F) for all other sensor types. [1]
		M18x1.5	12 mm (0.47 in)	24	
	G	G ½"	15 mm (0.6 in)	27	
		G ¼"	12 mm (0.47 in)	24	
	NPT	NPT ½" NPT ¾"	8 mm (0.32 in) 8.5 mm (0.33 in)	22 27	

1) The insert type is the deciding factor here. The process connection thread is of secondary importance.

Connection thread Cap nut [1]	Version	Thread length TL	Width across flats	
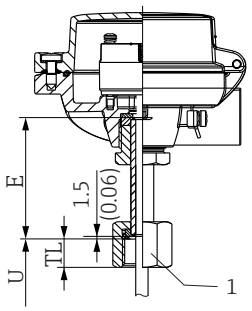 *1 Cap nut thread*	G½"	15.5 mm (0.61 in)	27 mm (1.06 in)	The cap nuts are not designed as process connections. This connection is only available for thermometers without a thermowell.
	G¾"	19.5 mm (0.77 in)	32 mm (1.26 in)	

1) For selection without thermowell. Only available for installation in an existing thermowell. Special attention has to be paid to the length as the insert is not springload!

The 316L compression fittings can only be used once due to deformation. This applies to all the components of the compression fittings! A replacement compression fitting must be secured at another point (grooves in thermowell). PEEK compression fittings must never be used at a temperature that is lower than the temperature present when the compression fitting is secured. This is because the fitting would no longer be leak-tight as a result of heat contraction of the PEEK material.

For higher requirements: SWAGELOCK or similar fittings are urgently recommended.

Compression fitting

Type TK40	Version	Dimensions		Technical properties
		ø di	Width across flats	
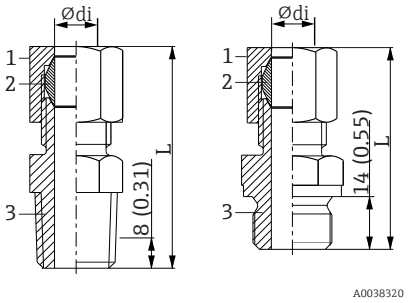 *1 Nut* *2 Ferrule* *3 Process connection*	NPT ½", L = approx. 52 mm (2.05 in) G ½", L = approx. 47 mm (1.85 in) Ferrule material PEEK or 316L Tightening torque: ▪ 10 Nm (PEEK) ▪ 25 Nm (316L)	6 mm (0.24 in)	G½": 27 mm (1.06 in) ½" NPT: 24 mm (0.95 in)	▪ $P_{max.}$ = 5 bar (72.5 psi), at T = +180 °C (+356 °F) for PEEK ▪ $P_{max.}$ = 40 bar (104 psi) at T = +200 °C (+392 °F) for 316L ▪ $P_{max.}$ = 25 bar (77 psi) at T = +400 °C (+752 °F) for 316L
Spring loaded version as option				
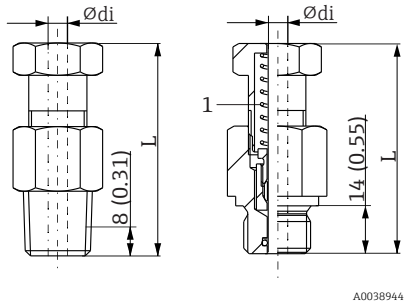 *1 Spring*	G½" or NPT ½", spring loaded, L = approx. 60 mm (2.36 in)	6 mm (0.24 in)	G½": 27 mm (1.06 in) ½" NPT: 24 mm (0.95 in)	It is not pressure tight. Only to be used in combination with thermowell or in medium air. Tightening torque: ▪ G½": 40 Nm ▪ ½" NPT: 55 Nm
Weld-in design				
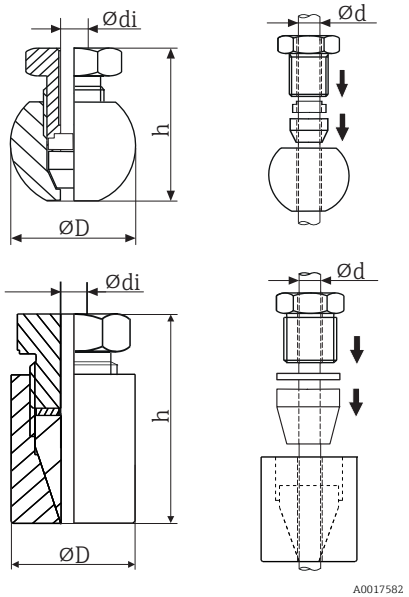	Spherical Ferrule material 316L Thread G¼"	3 mm (0.12 in) or 6 mm (0.24 in)	-	▪ $P_{max.}$: = 50 bar (725 psi) ▪ $T_{max.}$: = 200 °C (392 °F) ▪ Tightening torque: 25 Nm
	Cylindrical Ferrule material Elastosil Thread G½"		-	▪ $P_{max.}$: = 10 bar (145 psi) ▪ $T_{max.}$: = 200 °C (392 °F) ▪ Tightening torque: 5 Nm

Inserts

Sensor	Standard thin-film	iTHERM StrongSens	iTHERM QuickSens [1]	Wire wound	
Sensor design; connection method	1x Pt100, 3- or 4-wire, mineral insulated	1x Pt100, 3- or 4-wire, mineral insulated	1x Pt100, 3- or 4-wire ▪ Φ6 mm (¼ in), mineral insulated ▪ Φ3 mm (⅛ in), teflon insulated	1x Pt100, 3- or 4-wire, mineral insulated	2x Pt100, 3-wire, mineral insulated
Vibration resistance of the insert tip	> 3g	Enhanced vibration resistance > 60g	▪ Φ3 mm (⅛ in) > 3g ▪ Φ6 mm (¼ in) > 60g	> 3g	
Measuring range; accuracy class	−50 to +400 °C (−58 to +752 °F), Class A or AA	−50 to +500 °C (−58 to +932 °F), Class A or AA	−50 to +200 °C (−58 to +392 °F), Class A or AA	−200 to +600 °C (−328 to +1 112 °F), Class A or AA	
Diameter	3 mm (⅛ in), 6 mm (¼ in)	6 mm (¼ in)	3 mm (⅛ in), 6 mm (¼ in)		

1) Recommended for immersion lengths U < 70 mm (2.76 in)

TC thermocouples	Type K	Type J	Type N
Sensor design	Mineral insulated, Alloy600 sheated cable	Mineral insulated, stainless steel sheathed cable	Mineral insulated, Alloy TD sheated cable
Vibration resistance of the insert tip	> 3g		
Measuring range	−40 to 1 100 °C (−40 to 2 012 °F)	−40 to 750 °C (−40 to 1 382 °F)	−40 to 1 100 °C (−40 to 2 012 °F)
Connection type	Grounded or ungrounded		
Temperature-sensitive length	Insert length		
Diameter	3 mm (⅛ in), 6 mm (¼ in)		

Surface roughness

Values for wetted surfaces:

Standard surface	$R_a \leq$ 0.76 µm (0.03 µin)

Terminal heads

All terminal heads have an internal shape and size in accordance with DIN EN 50446, flat face and a thermometer connection with a M24x1.5 or ½" NPT thread. All dimensions in mm (in). The sample cable glands in the diagrams correspond to M20x1.5 connections with non-Ex polyamide cable glands. Specifications without head transmitter installed. For ambient temperatures with head transmitter installed, see the "Environment" section.

As a special feature, Endress+Hauser offers terminal heads with optimized terminal accessibility for easy installation and maintenance.

TA20AB	Specification
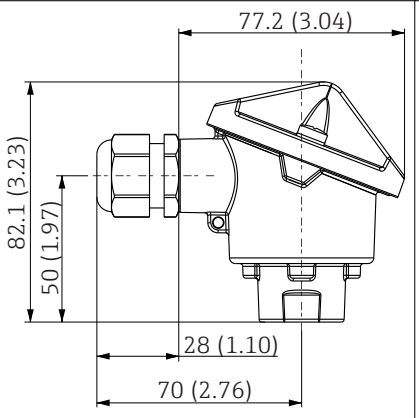	▪ Protection class: IP 66/68, NEMA 4x ▪ Temperature: −40 to +100 °C (−40 to +212 °F), polyamide cable gland ▪ Material: aluminum; polyester powder coated Seals: silicone ▪ Threaded cable entry: NPT ½" and M20x1.5 ▪ Color: blue, RAL 5012 ▪ Weight: approx. 300 g (10.6 oz)

TA30A	Specification
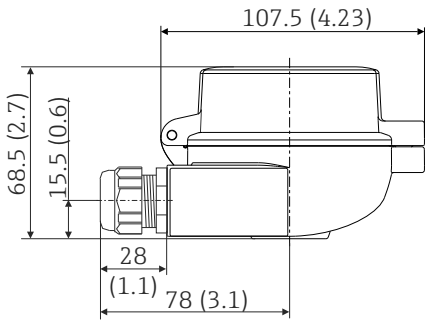	▪ Degree of protection: ▪ IP66/68 (NEMA Type 4x encl.) ▪ For ATEX: IP66/67 ▪ Temperature: −50 to +150 °C (−58 to +302 °F) without cable gland ▪ Material: aluminum, polyester powder coated Seals: silicone ▪ Cable entry thread: G ½", ½" NPT and M20x1.5; ▪ Protective fitting connection: M24x1.5 ▪ Head color: blue, RAL 5012 ▪ Cap color: gray, RAL 7035 ▪ Weight: 330 g (11.64 oz) ▪ Ground terminal, internal and external ▪ Available with sensors with 3-A® symbol

TA30A with display window in cover	Specification
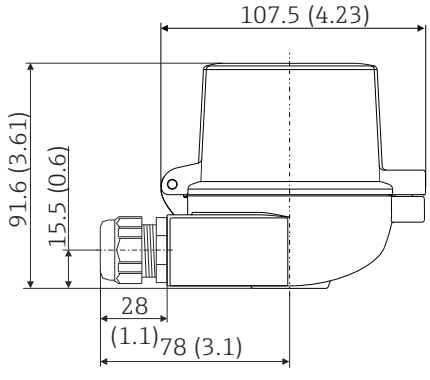	▪ Degree of protection: ▪ IP66/68 (NEMA Type 4x encl.) ▪ For ATEX: IP66/67 ▪ Temperature: −50 to +150 °C (−58 to +302 °F) without cable gland ▪ Material: aluminum, polyester powder coated Seals: silicone ▪ Cable entry thread: G ½", ½" NPT and M20x1.5 ▪ Protective fitting connection: M24x1.5 ▪ Head color: blue, RAL 5012 Cap color: gray, RAL 7035 ▪ Weight: 420 g (14.81 oz) ▪ Display window: single-pane safety glass according to DIN 8902 ▪ For TID10 display ▪ Ground terminal, internal and external ▪ Available with sensors with 3-A® symbol

TA30D	Specification
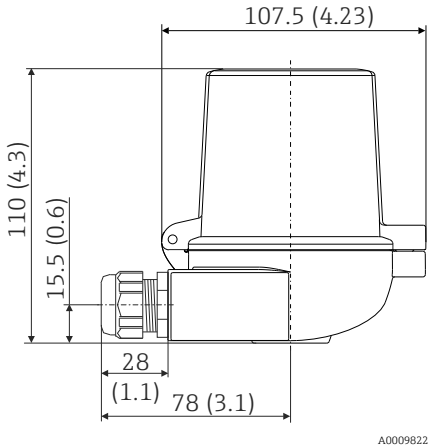	▪ Degree of protection: ▪ IP66/68 (NEMA Type 4x encl.) ▪ For ATEX: IP66/67 ▪ Temperature: −50 to +150 °C (−58 to +302 °F) without cable gland ▪ Material: aluminum, polyester powder coated Seals: silicone ▪ Cable entry thread: G ½", ½" NPT and M20x1.5 ▪ Protective fitting connection: M24x1.5 ▪ Two head transmitters can be mounted. In the standard configuration one transmitter is mounted in the terminal head cover and an additional terminal block is installed directly on the insert. ▪ Head color: blue, RAL 5012 ▪ Cap color: gray, RAL 7035 ▪ Weight: 390 g (13.75 oz) ▪ Ground terminal, internal and external ▪ Available with sensors with 3-A® symbol

TA30P	Specification
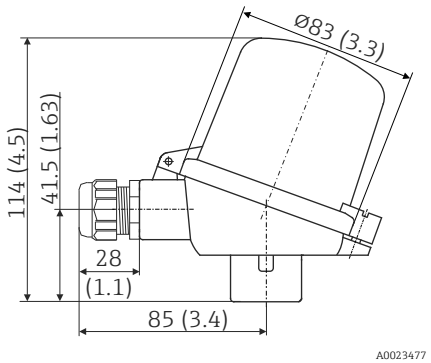	▪ Degree of protection: IP65 ▪ Max. temperature: −40 to +120 °C (−40 to +248 °F) ▪ Material: polyamide (PA12), antistatic Seals: silicone ▪ Threaded cable entry: M20x1.5 ▪ Protective fitting connection: M24x1.5 ▪ Two head transmitters can be mounted. In the standard configuration one transmitter is mounted in the terminal head cover and an additional terminal block is installed directly on the insert. ▪ Head and cap color: black ▪ Weight: 135 g (4.8 oz) ▪ Type of protection: intrinsic safety (G Ex ia) ▪ Ground terminal: only internal via auxiliary terminal ▪ Available with sensors with 3-A® symbol

TA30R (optionally with display window in cover)	Specification
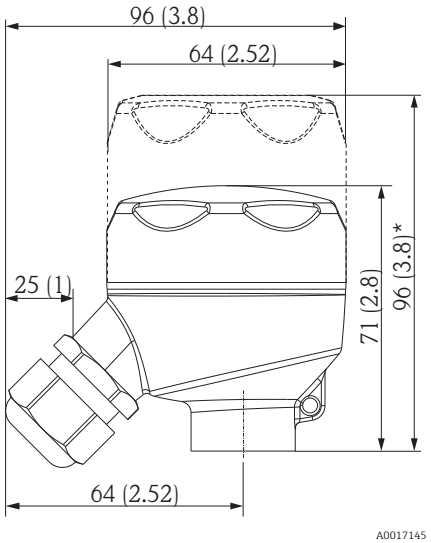 * Dimensions of version with display window in cover	▪ Degree of protection - standard version: IP69K (NEMA Type 4x encl.) Degree of protection - version with display window: IP66/68 (NEMA Type 4x encl.) ▪ Temperature: −50 to +130 °C (−58 to +266 °F) without cable gland ▪ Material: stainless steel 316L, abrasive-blasted or polished Seals: silicone, optional EPDM for applications free from paint-wetting impairment substances Display window: polycarbonate (PC) ▪ Cable entry thread ½" NPT and M20x1.5 ▪ Weight ▪ Standard version: 360 g (12.7 oz) ▪ Version with display window: 460 g (16.23 oz) ▪ Display window in cover optionally for head transmitter with display TID10 ▪ Protection armature connection: M24x1.5 or ½" NPT ▪ Ground terminal: internal as standard ▪ Available with 3-A marked sensors ▪ Not allowed for Class II and III applications

TA30R (high version for two transmitters)	Specification
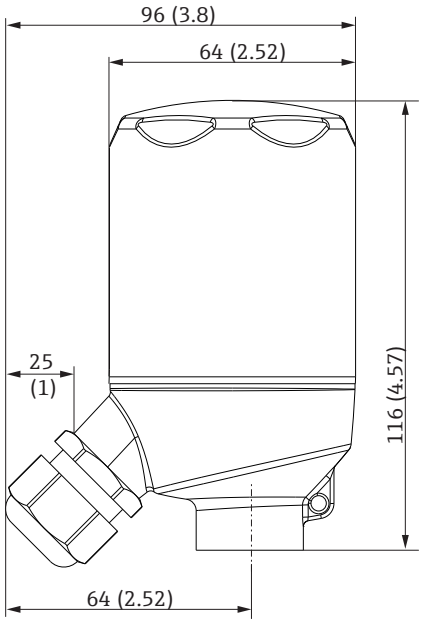	▪ Degree of protection: IP69K (NEMA Type 4x encl.) ▪ Temperature: −50 to +130 °C (−58 to +266 °F) without cable gland ▪ Material: stainless steel 316L, abrasive-blasted or polished Seals: EPDM ▪ Cable entry thread ½" NPT and M20x1.5 ▪ Weight: 460 g (16.23 oz) ▪ For two head transmitter ▪ Protection armature connection: M24x1.5 or ½" NPT ▪ Ground terminal: internal in standard version ▪ Not allowed for Class II and III applications ▪ Available with 3-A marked sensors

TA30H with display window in cover	Specification
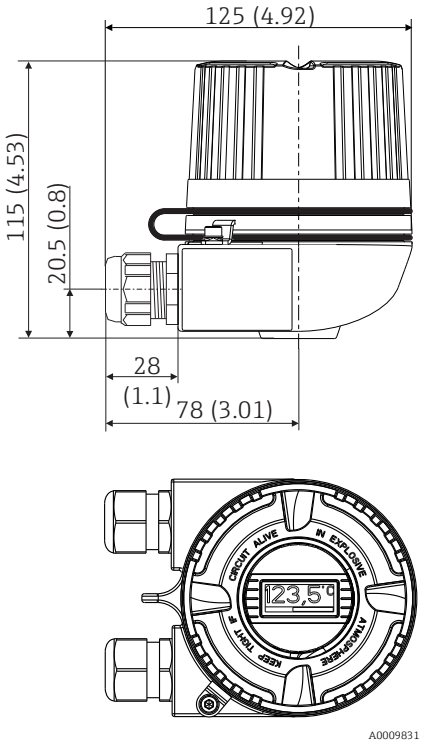	▪ Flameproof (XP) version, explosion-protected, captive screw cap, available with one or two cable entries ▪ Degree of protection: IP 66/68, NEMA Type 4x encl. Ex-version: IP 66/67 ▪ Temperature: −50 to +150 °C (−58 to +302 °F) for rubber seal without cable gland (observe max. permitted temperature of cable gland!) ▪ Material: ▪ Aluminum; polyester powder coated ▪ Stainless steel 316L without coating ▪ Klüber Syntheso Glep 1 dry-film lubricant ▪ Display window: single-pane safety glass according to DIN 8902 ▪ Thread: ½" NPT, ¾" NPT, M20x1.5, G½" ▪ Extension neck/thermowell connection: M20x1.5 or ½" NPT ▪ Color of aluminum head: blue, RAL 5012 ▪ Color of aluminum cap: gray, RAL 7035 ▪ Weight: ▪ Aluminum approx. 860 g (30.33 oz) ▪ Stainless steel approx. 2 900 g (102.3 oz) ▪ Head transmitter optionally available with TID10 display If the housing cover is unscrewed: Before tightening, clean the thread in the cover and housing base and lubricate if necessary (Recommended lubricant: Klüber Syntheso Glep 1)

TA30H	Specification
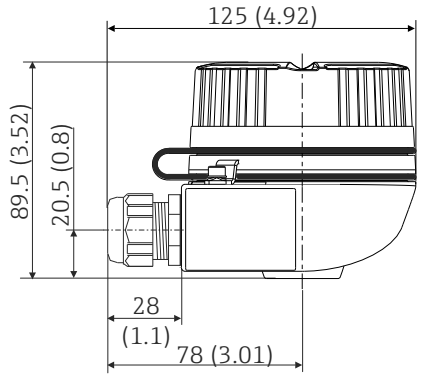	▪ Flameproof (XP) version, explosion-protected, captive screw cap, available with one or two cable entries ▪ Degree of protection: IP 66/68, NEMA Type 4x encl. Ex-version: IP 66/67 ▪ Temperature: −50 to +150 °C (−58 to +302 °F) for rubber seal without cable gland (observe max. permitted temperature of cable gland!) ▪ Material: ▪ Aluminum with polyester powder coating ▪ Stainless steel 316L without coating ▪ Klüber Syntheso Glep 1 dry-film lubricant ▪ Thread: ½" NPT, ¾" NPT, M20x1.5, G½" ▪ Extension neck/thermowell connection: M20x1.5 or ½" NPT ▪ Color of aluminum head: blue, RAL 5012 ▪ Color of aluminum cap: gray, RAL 7035 ▪ Weight: ▪ Aluminum: approx. 640 g (22.6 oz) ▪ Stainless steel: approx. 2 400 g (84.7 oz) If the housing cover is unscrewed: Before tightening, clean the thread in the cover and housing base and lubricate if necessary (Recommended lubricant: Klüber Syntheso Glep 1)

TA30EB	Specification
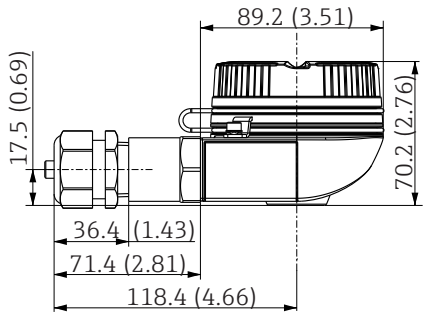	▪ Screw cap ▪ Degree of protection: IP 66/68, NEMA 4x ▪ Temperature: −50 to +150 °C (−58 to +302 °F) ▪ Material: aluminum; polyester powder coating; Klüber Syntheso Glep 1 dry-film lubricant ▪ Thread: M20x1.5 ▪ Extension neck/thermowell connection: NPT ½" ▪ Color of head: blue, RAL 5012 ▪ Color of cap: gray, RAL 7035 ▪ Weight: approx. 400 g (14.11 oz) ▪ Ground terminal: internal and external If the housing cover is unscrewed: Before tightening, clean the thread in the cover and housing base and lubricate if necessary (Recommended lubricant: Klüber Syntheso Glep 1)

TA30EB with display window in cover	Specification
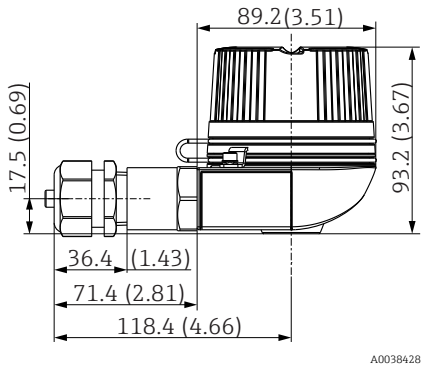	▪ Screw cap ▪ Degree of protection: IP 66/68, NEMA 4x Ex-version: IP 66/68 ▪ Temperature: −50 to +150 °C (−58 to +302 °F) for rubber seal without cable gland (observe max. permitted temperature of cable gland!) ▪ Material: aluminum; polyester powder coating; Klüber Syntheso Glep 1 dry-film lubricant ▪ Display window: single-pane safety glass according to DIN 8902 ▪ Thread: ½" NPT, ¾" NPT, M20x1.5, G½" ▪ Extension neck/thermowell connection: ½" NPT ▪ Color of head: blue, RAL 5012 ▪ Color of cap: gray, RAL 7035 ▪ Weight: approx. 400 g (14.11 oz) If the housing cover is unscrewed: Before tightening, clean the thread in the cover and housing base and lubricate if necessary (Recommended lubricant: Klüber Syntheso Glep 1)

Cable glands and connectors

Type	Suitable for cable entry	Degree of protection	Temperature range	Suitable cable diameter
Cable gland, polyamide blue (indication of Ex-i circuit)	½" NPT	IP68	−30 to +95 °C (−22 to +203 °F)	7 to 12 mm (0.27 to 0.47 in)
Cable gland, polyamide	½" NPT, ¾" NPT, M20x1.5 (optionally 2x cable entry)	IP68	−40 to +100 °C (−40 to +212 °F)	5 to 9 mm (0.19 to 0.35 in)
	½" NPT, M20x1.5 (optionally 2x cable entry)	IP69K	−20 to +95 °C (−4 to +203 °F)	
Cable gland for dust ignition-proof area, polyamide	½" NPT, M20x1.5	IP68	−20 to +95 °C (−4 to +203 °F)	
Cable gland for dust ignition-proof area, brass	M20x1.5	IP68 (NEMA Type 4x)	−20 to +130 °C (−4 to +266 °F)	
Fieldbus connector (M12x1 PA, 7/8" PA, FF)	½" NPT, M20x1.5	IP67, NEMA Type 6	−40 to +105 °C (−40 to +221 °F)	-
Fieldbus connector (M12, 8-pin)	M20x1.5	IP67	−30 to +90 °C (−22 to +194 °F)	-

For explosion proof thermometers no cable glands are assembled.

Certificates and approvals

Current certificates and approvals for the product are available at www.endress.com on the relevant product page:

1. Select the product using the filters and search field.
2. Open the product page.
3. Select **Downloads**.

Test on thermowell

Thermowell pressure tests are carried out in accordance with the specifications in DIN 43772. With regard to thermowells with tapered or reduced tips that do not comply with this standard, these are tested using the pressure of corresponding straight thermowells. Sensors for use in hazardous areas are also always subjected to a comparative pressure during the tests. Tests according to other specifications can be carried out on request. The liquid penetration test verifies that there are no cracks in the welded seams of the thermowell.

MID

Test certificate (only in SIL mode). In compliance with:
- WELMEC 8.8, "Guide on the General and Administrative Aspects of the Voluntary System of Modular Evaluation of Measuring Instruments."
- OIML R117-1 Edition 2007 (E) "Dynamic measuring systems for liquids other than water"
- EN 12405-1/A2 Edition 2010 "Gas meters - Conversion devices - Part 1: Volume conversion"
- OIML R140-1 Edition 2007 (E) "Measuring systems for gaseous fuel"

Ordering information

Detailed ordering information is available from your nearest sales organization www.addresses.endress.com or in the Product Configurator at www.endress.com:

1. Select the product using the filters and search field.
2. Open the product page.
3. Select **Configuration**.

Product Configurator - the tool for individual product configuration
- Up-to-the-minute configuration data
- Depending on the device: Direct input of measuring point-specific information such as measuring range or operating language
- Automatic verification of exclusion criteria
- Automatic creation of the order code and its breakdown in PDF or Excel output format
- Ability to order directly in the Endress+Hauser Online Shop

Accessories

Various accessories, which can be ordered with the device or subsequently from Endress+Hauser, are available for the device. Detailed information on the order code in question is available from your local Endress+Hauser sales center or on the product page of the Endress+Hauser website: www.endress.com.

Service-specific accessories

Accessories	Description
Applicator	Software for selecting and sizing Endress+Hauser measuring devices: ▪ Calculation of all the necessary data for identifying the optimum measuring device: e.g. pressure loss, accuracy or process connections. ▪ Graphic illustration of the calculation results Administration, documentation and access to all project-related data and parameters over the entire life cycle of a project. Applicator is available: Via the Internet: https://portal.endress.com/webapp/applicator

Accessories	Description
Configurator	Product Configurator - the tool for individual product configuration ▪ Up-to-the-minute configuration data ▪ Depending on the device: Direct input of measuring point-specific information such as measuring range or operating language ▪ Automatic verification of exclusion criteria ▪ Automatic creation of the order code and its breakdown in PDF or Excel output format ▪ Ability to order directly in the Endress+Hauser Online Shop The Configurator is available on the Endress+Hauser website at: www.endress.com -> Click "Corporate" -> Select your country -> Click "Products" -> Select the product using the filters and search field -> Open product page -> The "Configure" button to the right of the product image opens the Product Configurator.
DeviceCare SFE100	Configuration tool for devices via fieldbus protocols and Endress+Hauser service protocols. DeviceCare is the tool developed by Endress+Hauser for the configuration of Endress+Hauser devices. All smart devices in a plant can be configured via a point-to-point or point-to-bus connection. The user-friendly menus enable transparent and intuitive access to the field devices. For details, see Operating Instructions BA00027S
FieldCare SFE500	FDT-based plant asset management tool from Endress+Hauser. It can configure all smart field units in your system and helps you manage them. By using the status information, it is also a simple but effective way of checking their status and condition. For details, see Operating Instructions BA00027S and BA00065S

Supplementary documentation

The following types of documentation are available on the product pages and in the Download Area of the Endress+Hauser website (www.endress.com/downloads) (depending on the selected device version):

Document	Purpose and content of the document
Technical Information (TI)	**Planning aid for your device** The document contains all the technical data on the device and provides an overview of the accessories and other products that can be ordered for the device.
Brief Operating Instructions (KA)	**Guide that takes you quickly to the 1st measured value** The Brief Operating Instructions contain all the essential information from incoming acceptance to initial commissioning.
Operating Instructions (BA)	**Your reference document** The Operating Instructions contain all the information that is required in various phases of the life cycle of the device: from product identification, incoming acceptance and storage, to mounting, connection, operation and commissioning through to troubleshooting, maintenance and disposal.
Description of Device Parameters (GP)	**Reference for your parameters** The document provides a detailed explanation of each individual parameter. The description is aimed at those who work with the device over the entire life cycle and perform specific configurations.

Document	Purpose and content of the document
Safety Instructions (XA)	Depending on the approval, Safety Instructions (XA) are supplied with the device. The Safety Instructions are an integral part of the Operating Instructions. Information on the Safety Instructions (XA) that are relevant for the device is provided on the nameplate.
Supplementary device-dependent documentation (SD/FY)	Always comply strictly with the instructions in the relevant supplementary documentation. The supplementary documentation is an integral part of the device documentation.



www.addresses.endress.com

Endress+Hauser

People for Process Automation