ASF 112, 113: Damper actuator with spring return



ASF112F122



How energy efficiency is improved

Overload protection and end stop detection for efficient usage of energy

Features

- For controllers with switching (2- and 3-point) output
- For operating air dampers, shut-off dampers, butterfly valves and multi-leaf dampers
- Self-centring spindle adapter
- Manual adjustment using hexagon socket, including locking of gear unit
- Maintenance-free
- Suitable for all fitting positions

Technical data

Power supply		
	Power supply 230 V~	±10%, 50...60 Hz
	Power supply 24 V~	±20%, 50...60 Hz
	Power supply 24...48 V=	±20%
Parameters		
	Torque and holding torque	7 Nm
	Angle of rotation	Max. 95°
	Admissible damper surface area[1)]	Approx. 1.5 m²
	Running time for 90° motor	90 s
	Running time for 90° spring	15 s
Ambient conditions		
	Admissible ambient temperature	–32...55 °C
	Admissible ambient humidity	5...95% rh, no condensation
Construction		
	Housing	Cast aluminium
	Power cable	0.9 m, 0.75 mm²
Standards and directives		
	Type of protection	IP 54 (EN60529), suspended IP 42 (EN 60529), not suspended
	Protection class 24 V	III (IEC 60730)
	Protection class 230 V	II (IEC 60730)
	EMC directive 2004/108/EC	EN 61000-6-2, EN 61000-6-3
	Low-voltage directive 2006/95/EC	EN 60730-1, EN 60730-2-14
	Degree of contamination	II
	Over-voltage categories	III

Overview of types

Type	Control function	Voltage	Power consumption	Weight
ASF112F120	2-point	230 V~	4.5 W, 7.0 VA	1.2 kg
ASF112F122	2-point	24 V~/24...48 V=	3.5 W, 5.0 VA	1.2 kg
ASF112F220	2-point	230 V~	4.5 W, 7.0 VA	1.3 kg
ASF112F222	2-point	24 V~/24...48 V=	3.5 W, 5.0 VA	1.3 kg
ASF113F122	3-point	24 V~/24...48 V=	3.5 W, 5.0 VA	1.2 kg

ASF112F220, ASF112F222: Double auxiliary contacts 6(2) A; 24...250 V~ with cable 0.9 m; 6 × 0.75 mm²

[1)] *Recommended value for smooth-running air dampers*

Right of amendment reserved © 2015 Fr. Sauter AG

Accessories	
Type	Description
0372245001	Lever adaptor for converting rotation into stroke
0372245002	Lever adaptor for converting rotation into stroke, with carrier plate for mounting on wall or plinth
0510240001	Assembly kit for VKR/BKR ball valves as spare part and as accessory for rotary actuators ASF 112, 113 from index B

Description of operation

2-point model:
After the power is connected, the control unit to be activated is moved in the direction of the 90° position until the power-dependent cut-off is performed (scale on actuator, max. angle of rotation 95°). In the process, the gear unit with its brushless DC motor is stopped and blocked. If the power is cut off or switched off, the motor releases the gear unit so that the spring turns the coupling piece back to the 0° position.

3-point model:
The actuator turns from 0° to 90° when the power is applied to connection 2 (cable = violet), and from 90° to 0° when the power is applied to connection 3 (cable = orange). The actuator stops in the middle position of the 3-point controller. If the power is cut off or is switched off by a safety device at connection 21 (cable = red), the gear unit is released so that the spring turns the coupling piece back to the 0° position. In the two end positions (limit stop of damper, limit stop due to angle-of-rotation limit, max. angle of rotation of 95° reached) or in the case of an overload, the torque-dependent cut-off is activated (no limit switches).

Intended use

This product is only suitable for the purpose intended by the manufacturer, as described in the “Description of operation” section.
All related product documents must also be adhered to. Changing or converting the product is not admissible.

Engineering and fitting notes

The electronic concept enables the parallel operation of multiple air dampers with different torques. However, it must be ensured that the operating voltage is within the required tolerance range. The actuator can be fitted in any position. It can be plugged directly onto the damper spindle and is fixed by means of the self-centring clamping lever.
No auxiliary switches or potentiometers can be installed subsequently.
The angle of rotation can be limited to between 0° and 90° in 5° stages.

Outdoor installation

We recommend protecting the devices from the weather if they are installed outside buildings.

Additional version information

The two-part section of the housing (must not be opened) contains the brushless DC motor, the electronic control unit, the maintenance-free gear unit with the anti-blocking function, the return spring and, in the 230 V model, the transformer. The clockwise or anti-clockwise direction is determined by how the actuator is mounted on the damper spindle (changes the direction of rotation of the safety function). This coupling piece is suitable for Ø 6.4...20.5 mm and □•6.4...13 mm damper spindles. The actuator can be turned and locked into any position using the hex spanner supplied (see MV 505820). The gear unit is released again by unlocking it mechanically or by connecting the operating voltage.

Power consumption

Type	Running time s	Status	Active power P W	Apparent power S VA
ASF 112 F120	90	Operating standstill	2.6 0.26	4.6 0.48
ASF 112 F122	90	Operating standstill	2.0 1.9	3.0 2.9

SAUTER Right of amendment reserved © 2015 Fr. Sauter AG

Disposal

When disposing of the product, observe the currently applicable local laws.
More information on materials can be found in the Declaration on materials and the environment for this product.

Connection diagram

ASF 112 (2 pt)

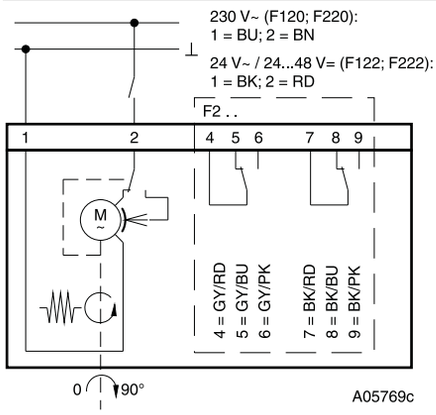

ASF 113 (3 pt)

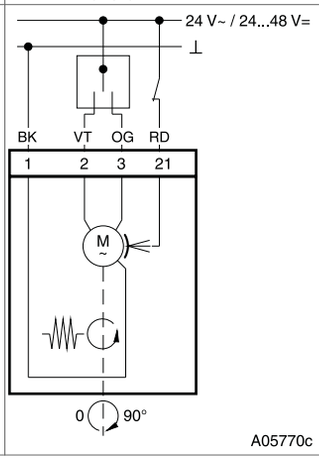

Dimension drawing

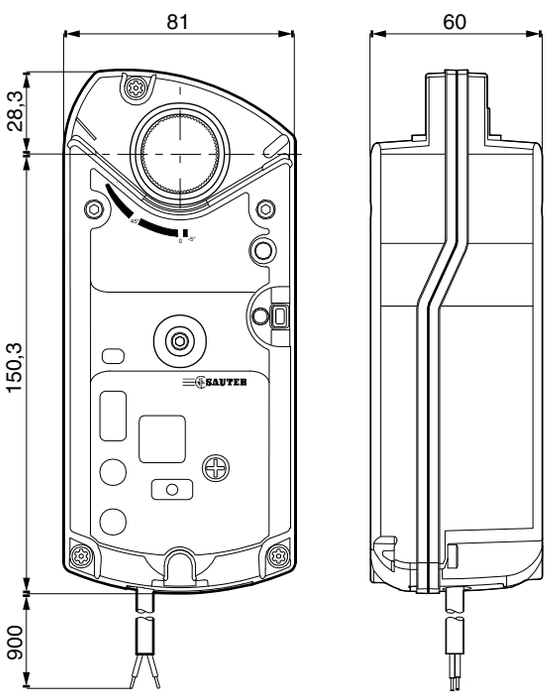

Fr. Sauter AG
Im Surinam 55
CH-4016 Basel
Tel. +41 61 - 695 55 55
www.sauter-controls.com

 Right of amendment reserved © 2015 Fr. Sauter AG