Trantorque® Keyless Bushings

INSTALLATION INSTRUCTIONS

A Trantorque Keyless Bushing offers flexible and easy installation while providing exceptional holding power. To ensure a Trantorque unit performs as specified, it must be installed properly.

Warning: Use no lubricants in this installation.

1. Shaft and component bore must be within ±0.003" (±0.08mm) or ±0.0015" (±0.04mm) mini series of stated bore diameter and must have a surface finish of 32-125 Ra (roughness average). If the surface finish is outside these specified values, consult Fenner Drives.
2. Both shaft and component bore must be completely free of paint, grease, oil, and dirt. If necessary, clean the surfaces with a non-petroleum based solvent, such as isopropyl alcohol.
3. Insert the Trantorque unit into the component to be mounted, making sure the mating hub is flush against the shoulder at the hex flats.
4. Position the assembly at the desired location on the shaft and hand-tighten the nut (clockwise) until the assembly becomes snug on the shaft.

Warning: Do not hammer or use any type of impact to force the Trantorque assembly along the shaft.

Warning: The shaft must fully engage the shaft gripping area (Figure 1) of the Trantorque unit. Figure 2 illustrates minimum shaft engagement.

5. Using a torque wrench, tighten the nut to the proper installation torque. See table for torque value. (Note: Fenner Drives has available crowfoot wrenches for square drives in sizes from ½" to 3½".) The hex flats on the outer ring are provided for counter-torque, eliminating the need to hold the component or shaft while applying installation torque.

Note: At full installation torque, the assembly will have moved approximately 0.075" (±1.9mm) or 0.045" (±1.1mm) mini series axially along the shaft away from the nut. If axial position is critical it may be necessary to loosen the nut and reposition the assembly. (Does not apply to Trantorque NT [Non-Traversing] units which have no axial movement.)

Warning: Over-tightening the nut could damage the Trantorque unit and/or the mounted component.

Installation Torque on Nut

Inch Shaft Size	in lb	Metric Shaft Size	Nm
MINI SERIES			
3/16" – 1/4"	125	3 – 6mm	14.1
5/16" – 3/8"	150	7 – 9mm	17.0
7/16" – 1/2"	175	10 – 12mm	19.8
9/16" – 5/8"	200	14 – 16mm	22.6
3/4"	700	17mm	80.0
Inch Shaft Size	**ft lb**	**Metric Shaft Size**	**Nm**
5/8" – 3/4"	100	15 – 19mm	136
13/16" – 1"	125	20 – 25mm	170
1 1/16" – 1 1/4"	167	28 – 32mm	225
1 5/16" – 1 1/2"	192	34 – 38mm	260
1 9/16" – 1 3/4"	234	40 – 42mm	316
1 13/16" – 2"	409	45 – 50mm	554
2 1/16" – 2 1/4"	442	55mm	600
2 5/16" – 2 1/2"	467	60mm	635
2 9/16" – 2 3/4"	500	65 – 70mm	680
2 13/16" – 3"	550	75mm	750

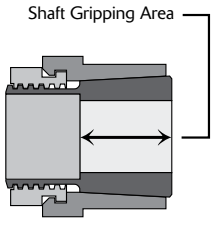

Figure 1

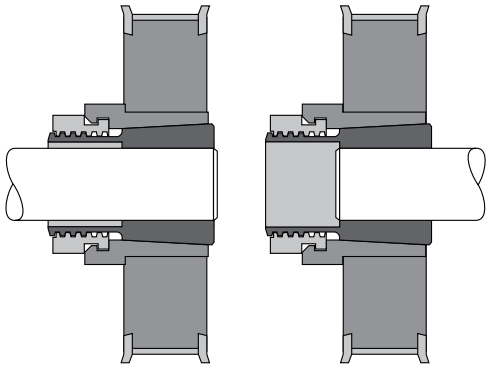

Figure 2

Fenner Drives®
an ISO 9001:2000 certified company
www.fennerdrives.com
tel: +1.717.665.2421

FORM T-PR-040 12/03/2008