II5961

Inductive high-temperature sensor

IIA3010ZBPKG/5M/SH

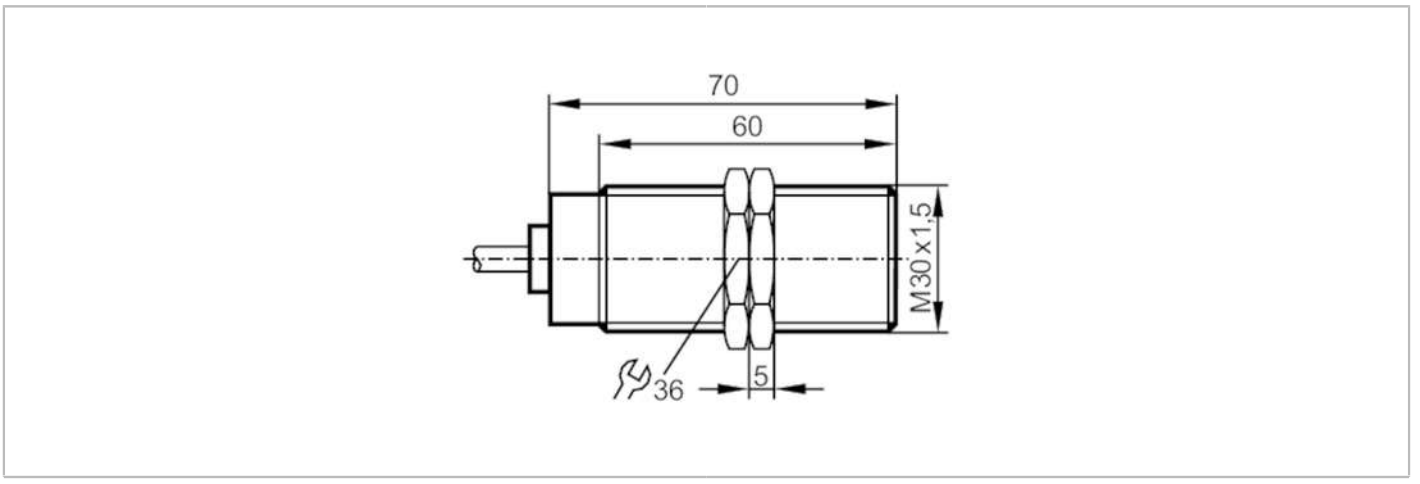

Product characteristics		
Electrical design		PNP
Output function		normally open
Sensing range	[mm]	10
Housing		threaded type
Dimensions	[mm]	M30 x 1.5 / L = 70
Application		
Application		high-temperature applications
Electrical data		
Operating voltage	[V]	10...35 DC
Current consumption	[mA]	< 15
Protection class		III
Reverse polarity protection		yes
Outputs		
Electrical design		PNP
Output function		normally open
Max. voltage drop switching output DC	[V]	2
Permanent current rating of switching output DC	[mA]	150
Switching frequency DC	[Hz]	200
Short-circuit protection		yes
Type of short-circuit protection		pulsed
Overload protection		yes
Detection zone		
Sensing range	[mm]	10
Operating distance	[mm]	0...8.1
Accuracy / deviations		
Correction factor		steel: 1 / stainless steel: 0.6 / brass: 0.3 / aluminium: 0.2 / copper: 0.1

II5961

Inductive high-temperature sensor

IIA3010ZBPKG/5M/SH

Hysteresis	[% of Sr]	3...15	
Switch point drift	[% of Sr]	-10...10	
Operating conditions			
Ambient temperature	[°C]	0...180	
Protection		IP 65	
Tests / approvals			
EMC		EN 61000-4-2 ESD	2 kV CD / 4 kV AD
		EN 61000-4-3 HF radiated	3 V/m
		EN 61000-4-4 Burst	2 kV
		EN 61000-4-6 HF conducted	3 V
MTTF	[years]	692	
Mechanical data			
Weight	[g]	355.5	
Housing		threaded type	
Mounting		flush mountable	
Dimensions	[mm]	M30 x 1.5 / L = 70	
Thread designation		M30 x 1.5	
Materials		housing: stainless steel; sensing face: LCP	
Accessories			
Items supplied		lock nuts: 2	
Remarks			
Pack quantity		1 pcs.	

Electrical connection

Cable: 5 m, silicone; highly flexible; 3 x 0.22 mm²

Connection

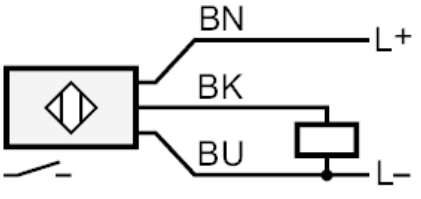

	Core colours :
BK =	black
BN =	brown
BU =	blue