Verderflex
Mini-Load OEM

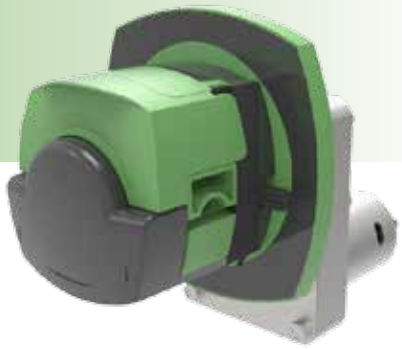

VERDERFLEX®

Description

The Verderflex Mini-load tube pump has a robust and reliable panel mounted pump head which offers quick and easy tube change with it's flip top design. The pump head also offers low pulsation and high accuracy dosing with it's 4 roller rotor. The tube as well as the actual pump head can be changed without the requirement for any tools. This pump is ideal for applications that require continuous tubing, frequent tube change and low pulsation dosing.

Features and benefits

- Accuracy (with 4 roller design)
- Low pulsation dosing
- Quick and easy tube change
- Can be used for continuous tubing (reduced risk of contamination)
- Tool free change of tubing and pump head
- Two channel pump head option

Description	Material
Pump Head	Acetal & Glass Filled Nylon (One or Two head options available)
Maximum Discharge	2 Bar
Motor	Brushed DC Version: 12 or 24 V DC 20W Long Life Brushed DC Motor Standard Speeds - 51rpm, 82rpm, 125rpm, 176rpm (12V only) or 240rpm(12V only) Brushless DC Version: 24 V DC 20W Long Life Brushless DC Motor Standard Speeds 240rpm AC Version 230V 50Hz 100-280W Asynchronous Shaded Pole Motor (for intermittent duty) with speeds - 51rpm, 82rpm, 125rpm
Rotor	4 Roller
Tube	Verderprene, Silicone
Tube Sizes	1.6 x 1.6mm, 3.2 x 1.6mm, 4.0 x 1.6mm, 4.8 x 1.6mm
Weight	1.5 kg

Typical Flow Rates (at nominal speed)

Tube (ID x WT)	Units	51 RPM	82 RPM	125 RPM	176 RPM	240 RPM
1.6 x 1.6 mm	ml/min	8.20	16.9	20.1	30.5	37.8
	l/hr	0.49	1.01	1.21	1.83	2.27
	GPH	0.13	0.27	0.32	0.48	0.60
3.2 x 1.6 mm	ml/min	30.6	56.7	68.3	102.8	130.4
	l/hr	1.84	3.40	4.10	6.17	7.82
	GPH	0.48	0.90	1.08	1.63	2.07
4.0 x 1.6 mm	ml/min	44.8	87.0	103.9	145.2	202.9
	l/hr	2.69	5.22	6.23	8.71	12.17
	GPH	0.71	1.38	1.65	2.30	3.22
4.8 x 1.6 mm	ml/min	52.5	96.8	121.3	176.1	233.7
	l/hr	3.20	5.81	7.28	10.57	14.02
	GPH	0.83	1.53	1.92	2.79	3.70

Flows are typical and were measured with water at 20°C with no suction lift, discharge pressure and no load on motor gearbox unit. Actual flows will vary according to suction conditions, discharge pressure, motor load and normal component production tolerances.

Verderflex
Mini-Load OEM

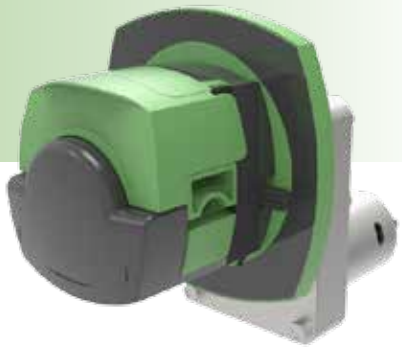

VERDERFLEX®

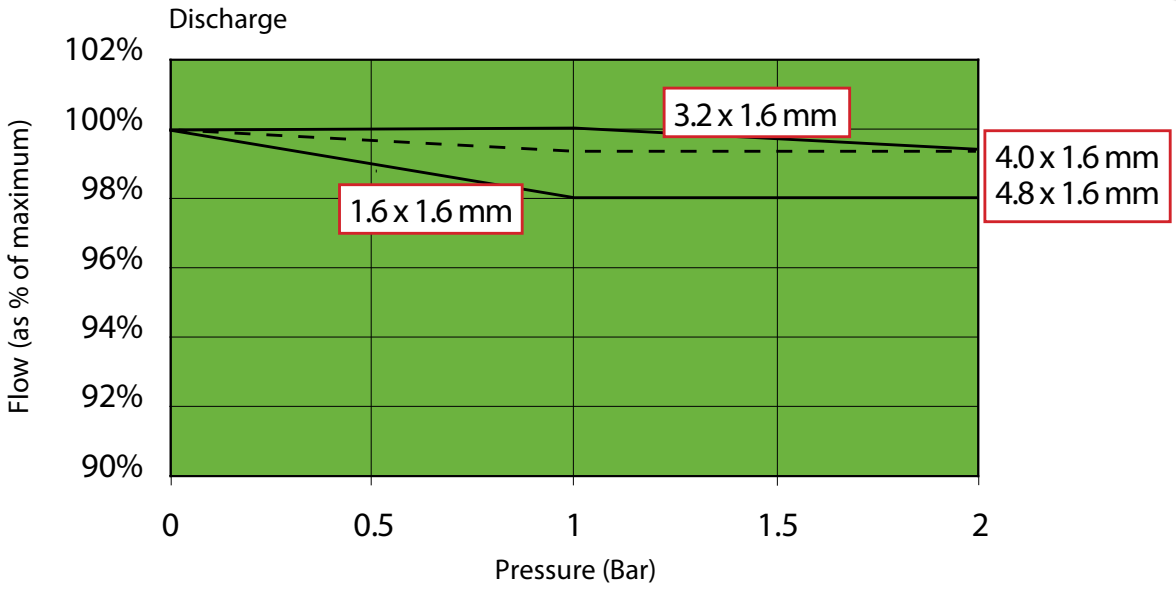

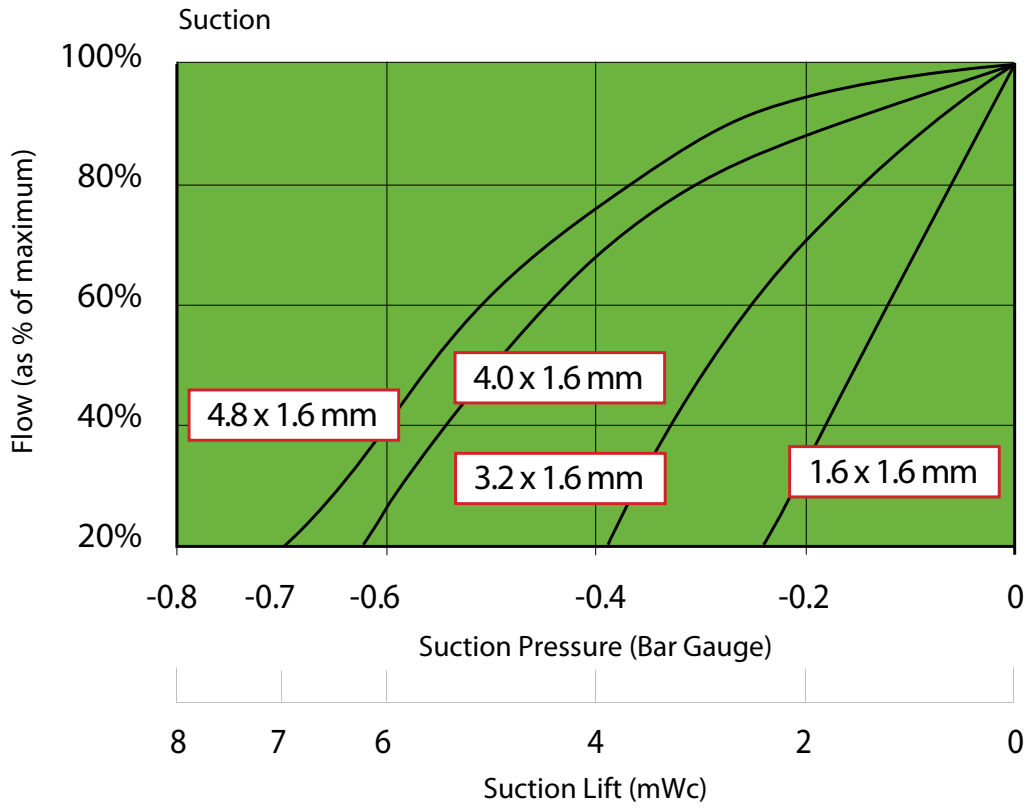

Verderflex
Mini-Load OEM

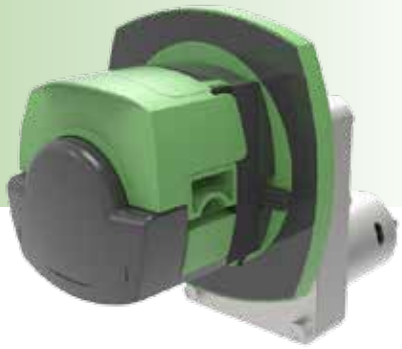

VERDERFLEX®

Mini-load Pump head with brushed d.c. motor

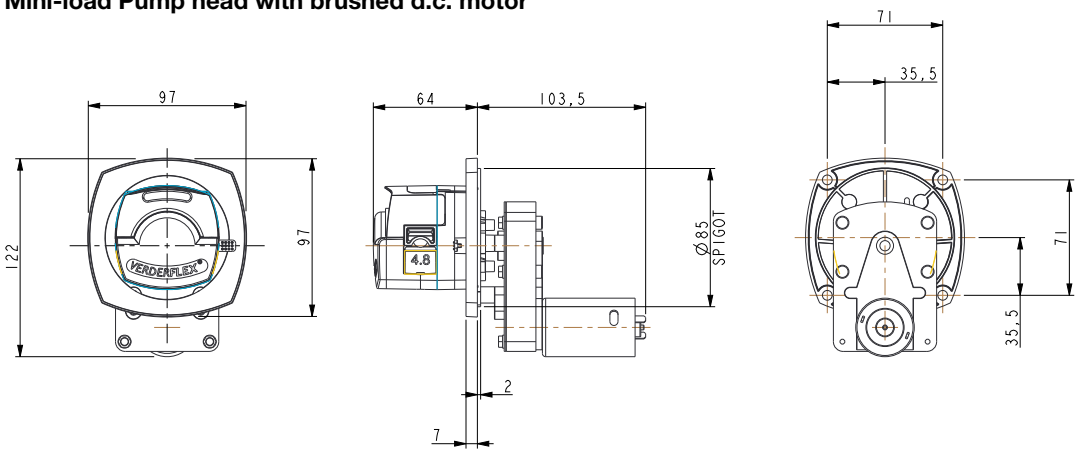

Mini-load Pump head with brushless d.c. motor

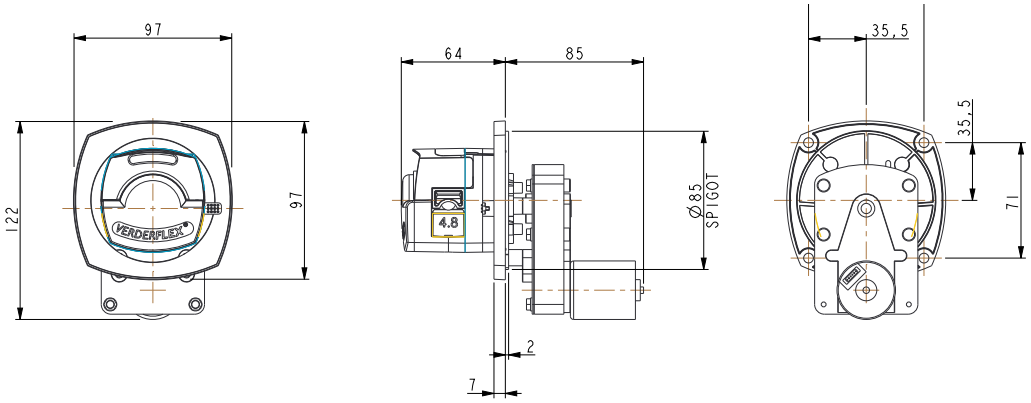

Mini-load Pump head with a.c motor

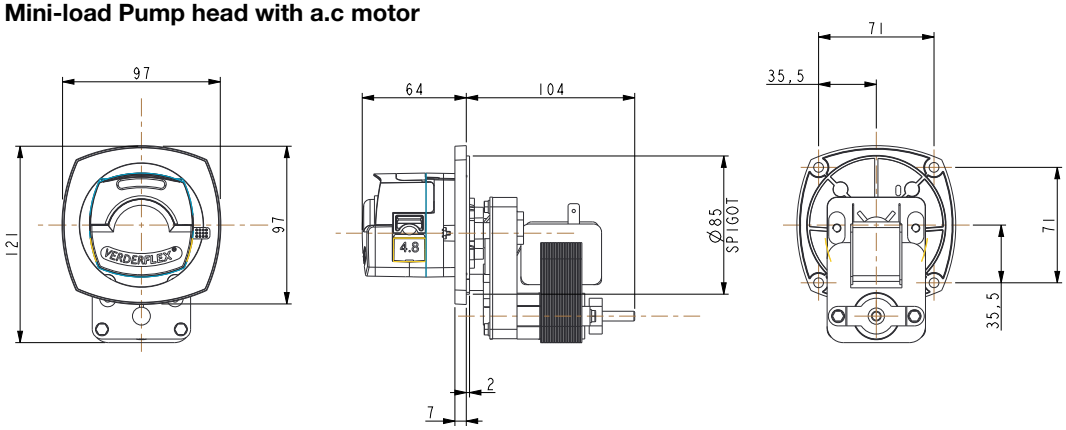

All dimensions are in mm.
All dimensions are for guidance only.

VP_Mini_load_Technosheet_rev01_2017_(eu)



Find your local supplier at www.verderflex.com

For construction, installation and floor mounting drawings please contact your local authorised Verderflex distributor.

VERDER
passion for pumps