3212 A

Popular item
SKF Explorer

Dimensions

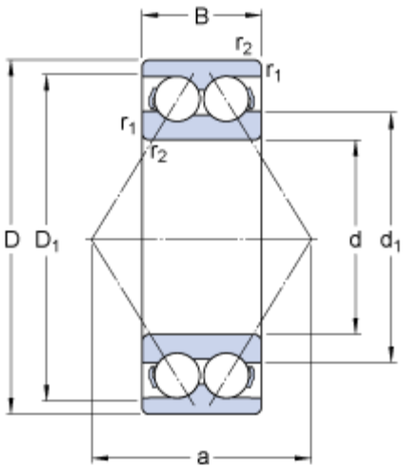

d		60	mm
D		110	mm
B		36.5	mm
d_1	≈	74.459	mm
D_1	≈	96.2	mm
$r_{1,2}$	min.	1.5	mm
a		63	mm

Abutment dimensions

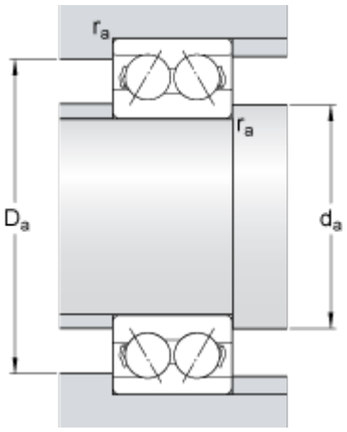

d_a	min.	69	mm
D_a	max.	101	mm
r_a	max.	1.5	mm

Calculation data

Basic dynamic load rating	C	75	kN
Basic static load rating	C_0	64	kN
Fatigue load limit	P_u	2.75	kN
Reference speed		5600	r/min
Limiting speed		5600	r/min
Calculation factor	k_r	0.06	
Calculation factor	e	0.8	
Calculation factor	X	0.63	
Calculation factor	Y_0	0.66	
Calculation factor	Y_1	0.78	
Calculation factor	Y_2	1.24	

Mass

Mass bearing	1.2	kg