DESIGN UNITS: METRIC (mm) [INCHES] UNLESS OTHERWISE SPECIFIED — THIRD ANGLE PROJECTION

Class J Fuseblocks(600V) Catalog Data

Catolog Number	Covers		Voltage	Current	Number of Poles	Label
Class J	w/o Indication	w/ Indication				
JM60100-1CR	CVR-J-60100	CVRI-J-60100	600	100	1	JM60100-1CR
JM60100-2CR					2	JM60100-2CR
JM60100-3CR					3	JM60100-3CR
JM60200-1CR	CVR-J-60200	CVRI-J-60200		200	1	JM60200-1CR
JM60200-2CR					2	JM60200-2CR
JM60200-3CR					3	JM60200-3CR
JM60400-1CR	CVR-J-60400	CVRI-J-60400		400	1	JM60400-1CR
JM60400-2CR					2	JM60400-2CR
JM60400-3CR					3	JM60400-3CR
JM60600-1CR	CVR-J-60600	CVRI-J-60600		600	1	JM60600-1CR
JM60600-2CR					2	JM60600-2CR
JM60600-3CR					3	JM60600-3CR

COOPER Bussmann
St. Louis MO 63178

TITLE: Class J fuse holder-CUST

SCALE: 1:5 SIZE: A3 SHEET: 1 OF 14

Drawing template A3 : Rev 05

DESIGN UNITS: METRIC (mm) [INCHES] UNLESS OTHERWISE SPECIFIED

THIRD ANGLE PROJECTION

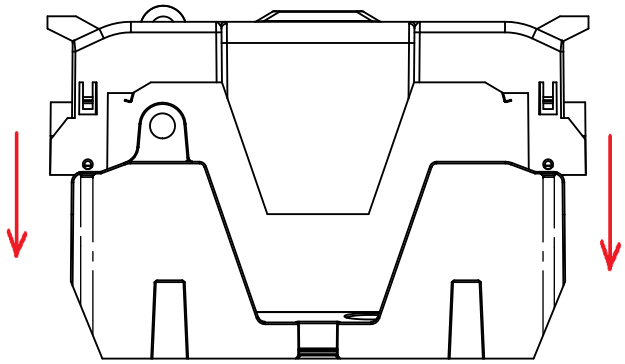

PUSH DOWN

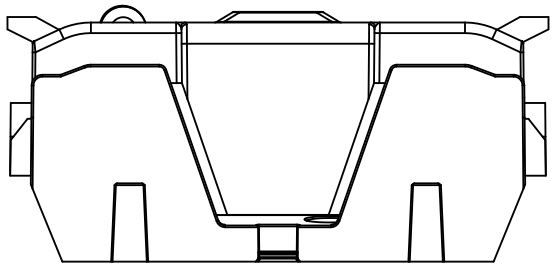

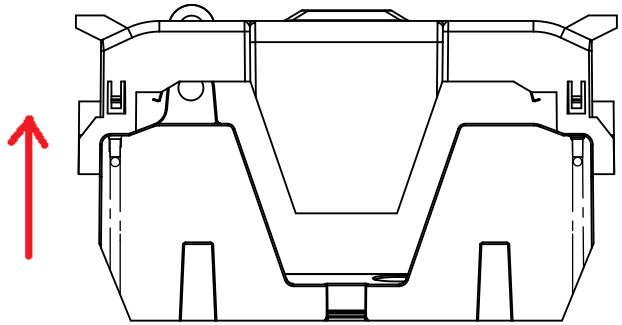

LIFT UP

LIFT UP ,THEN
ROTATE OVER

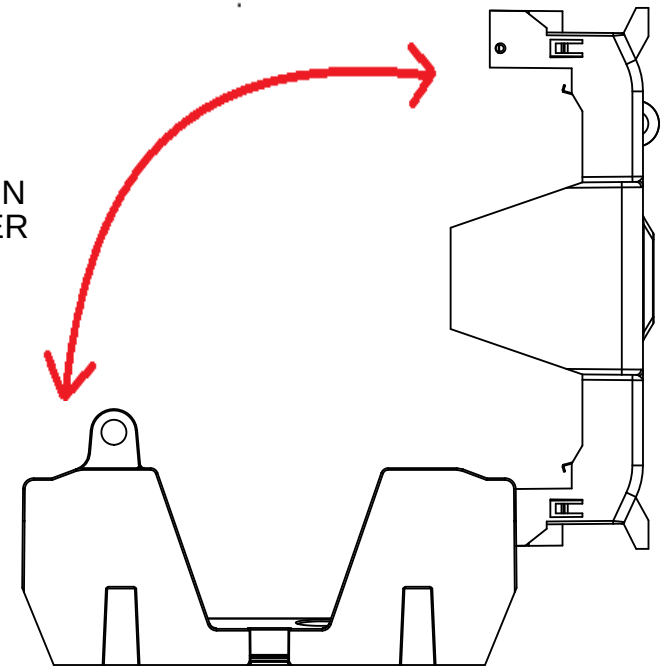

COOPER Bussmann
St. Louis MO 63178

TITLE:

Class J fuse holder-CUST

SCALE:	SIZE:	SHEET:
1:2	A3	2 OF 14

Drawing template A3 : Rev 05

www.Bussmann.com

DESIGN UNITS: METRIC (mm) [INCHES] — UNLESS OTHERWISE SPECIFIED — THIRD ANGLE PROJECTION

JM60100-1CR

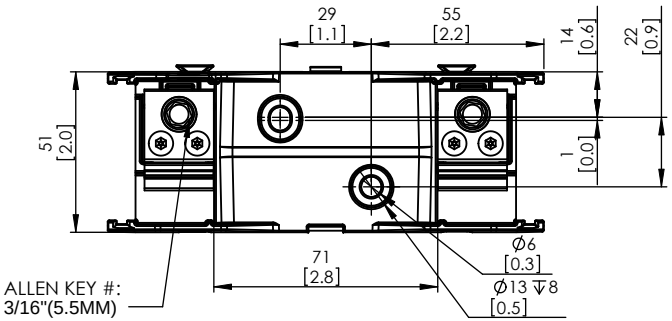

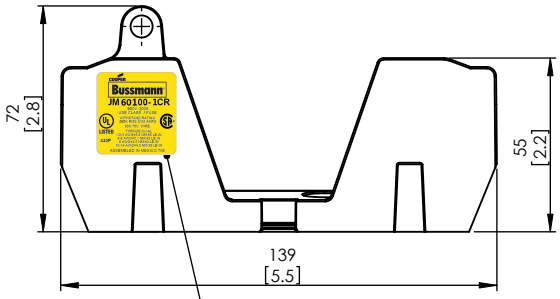



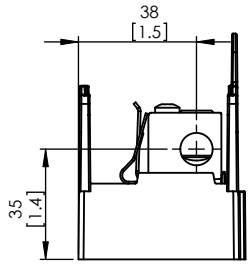

JM60100-1CR WITH CVR-J-60100 INSTALLED

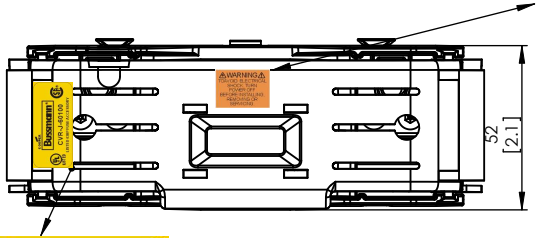

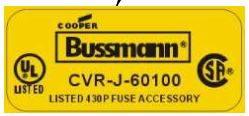

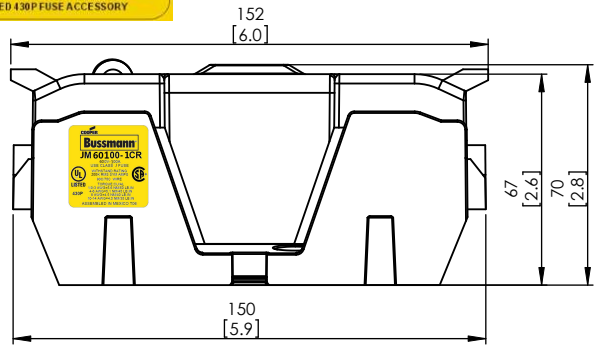

CVR-J-60100

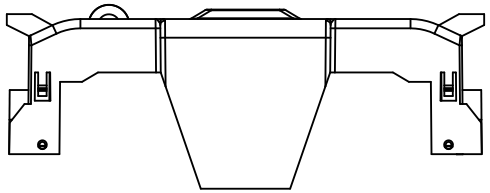

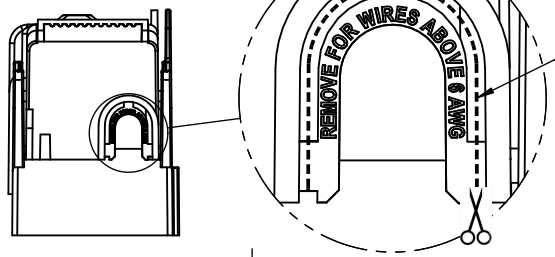

JM60100-1CR WITH CVRI-J-60100 INSTALLED

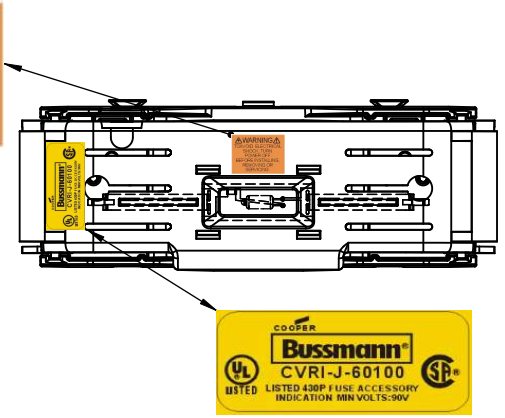

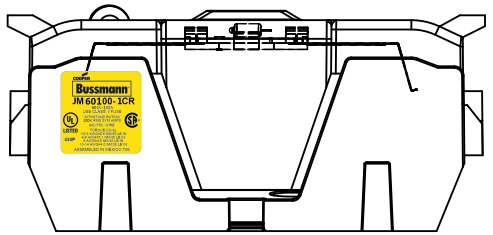

CVRI-J-60100

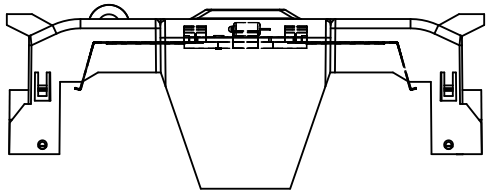

COOPER Bussmann
St. Louis MO 63178

TITLE: **Class J fuse holder-CUST**

SCALE: 1:1 | SIZE: A3 | SHEET: 3 OF 14

Drawing template A3 : Rev 05

DESIGN UNITS: METRIC (mm) [INCHES] — UNLESS OTHERWISE SPECIFIED — THIRD ANGLE PROJECTION

JM60100-2CR

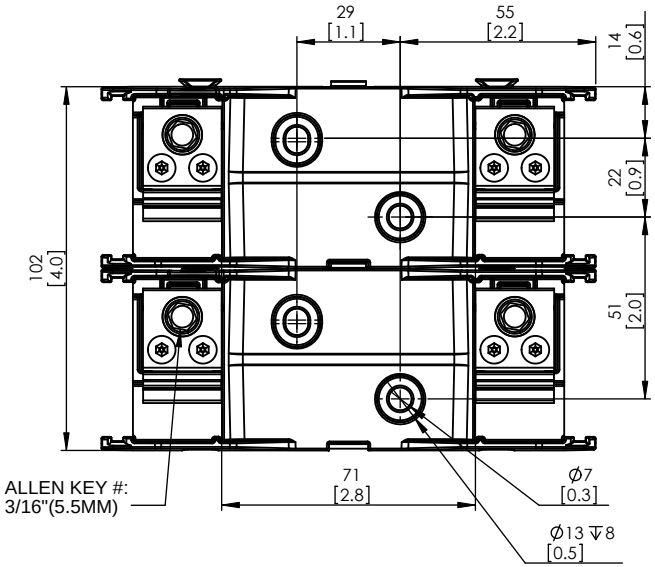

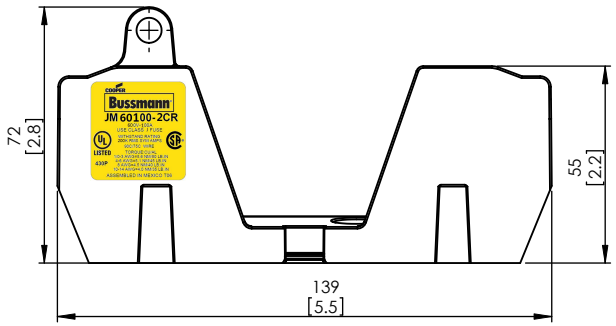

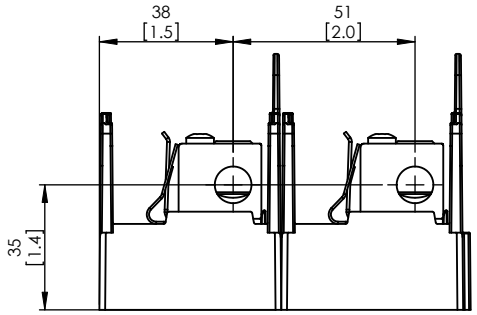

JM60100-2CR WITH CVR-J-60100 INSTALLED

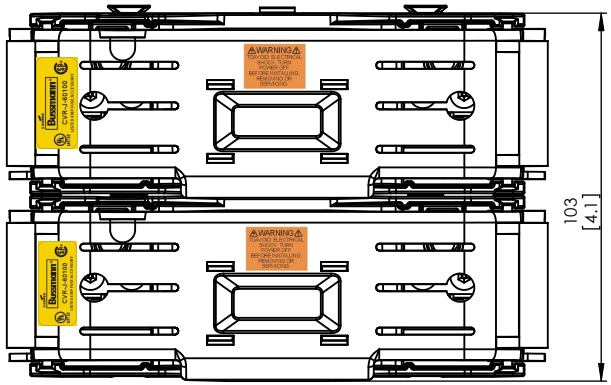

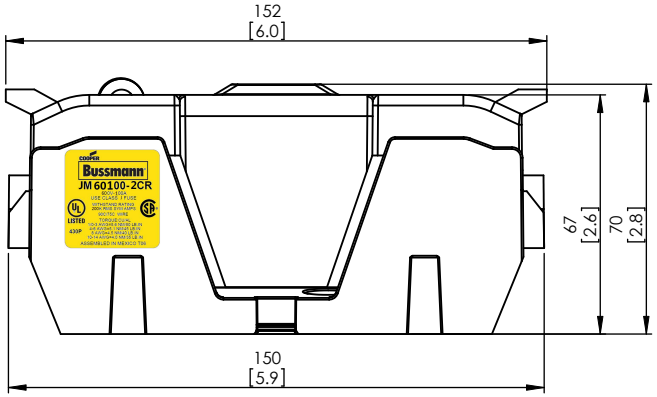

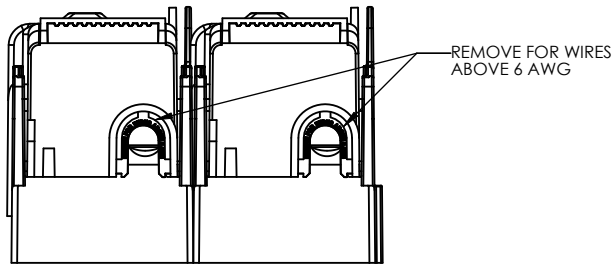

JM60100-2CR WITH CVRI-J-60100 INSTALLED

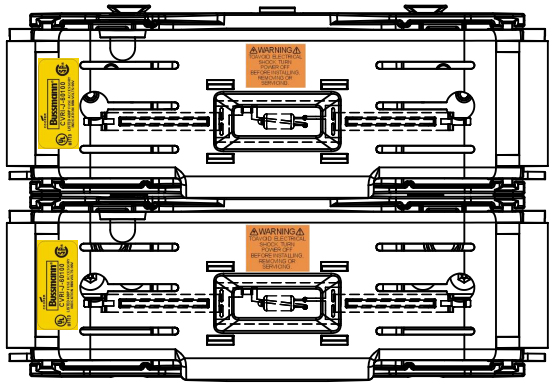

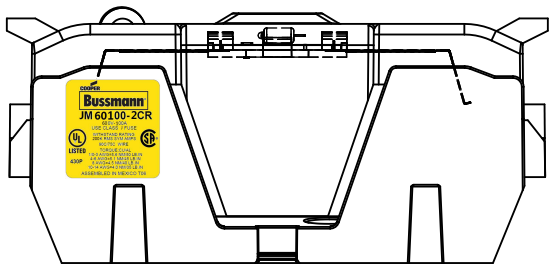

COOPER Bussmann
St. Louis MO 63178

TITLE:

Class J fuse holder-CUST

SCALE:	SIZE:	SHEET:
1:1	A3	4 OF 14

Drawing template A3 : Rev 05

DESIGN UNITS: METRIC (mm) [INCHES] — UNLESS OTHERWISE SPECIFIED — THIRD ANGLE PROJECTION

JM60100-3CR

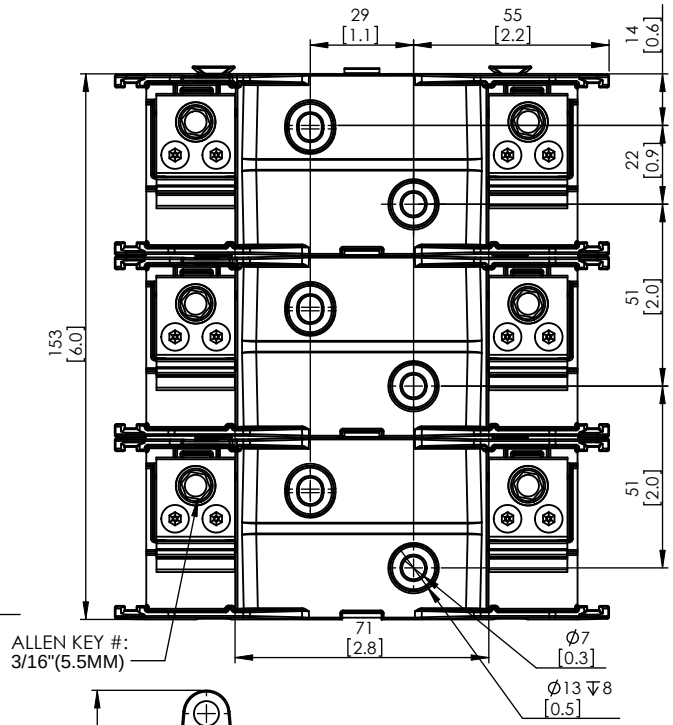

JM60100-3CR WITH CVR-J-60100 INSTALLED

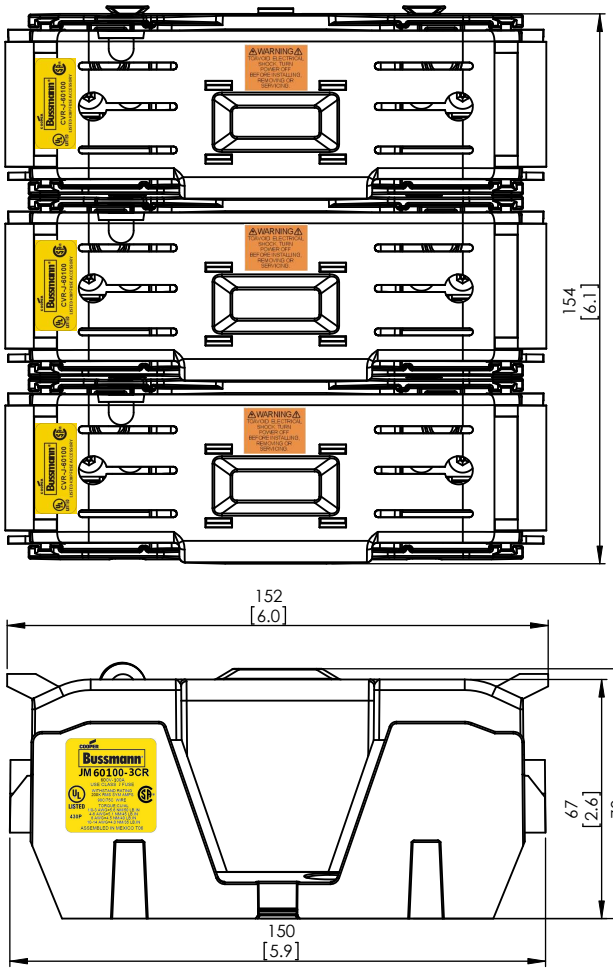

JM60100-3CR WITH CVRI-J-60100 INSTALLED

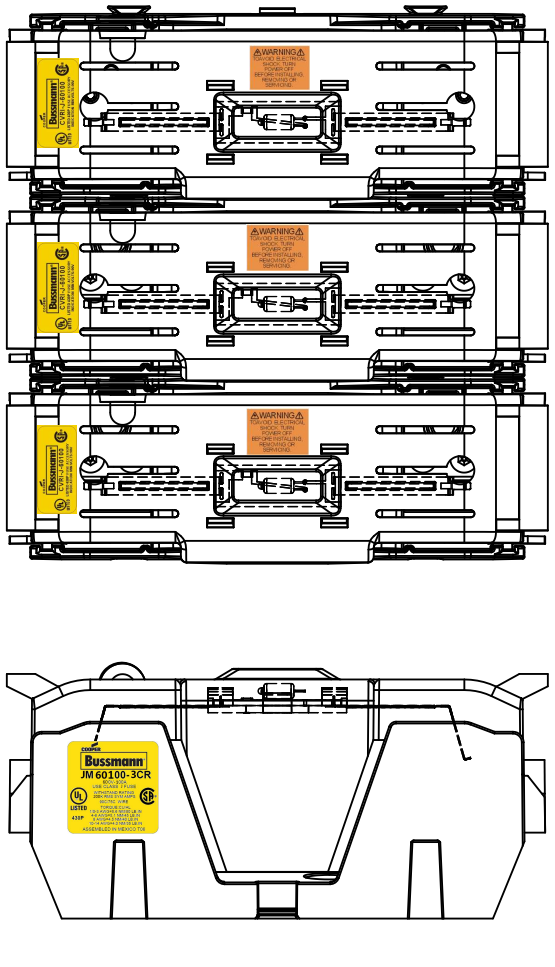

COOPER Bussmann
St. Louis MO 63178

TITLE:

Class J fuse holder-CUST

SCALE:	SIZE:	SHEET:
1:1	A3	5 OF 14

Drawing template A3 : Rev 05

DESIGN UNITS: METRIC (mm) [INCHES] — UNLESS OTHERWISE SPECIFIED — THIRD ANGLE PROJECTION

JM60200-1CR

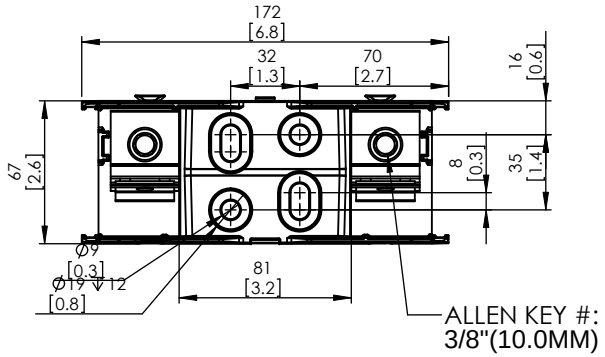

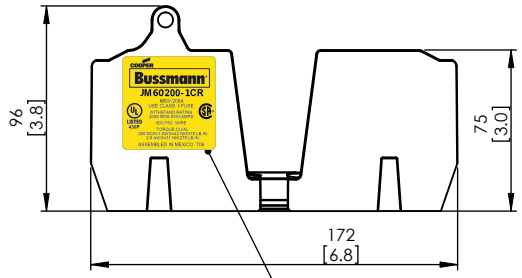



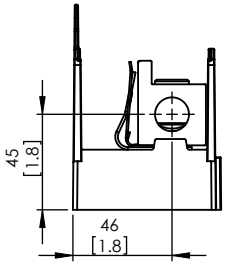

JM60200-1CR WITH CVR-J-60200 INSTALLED

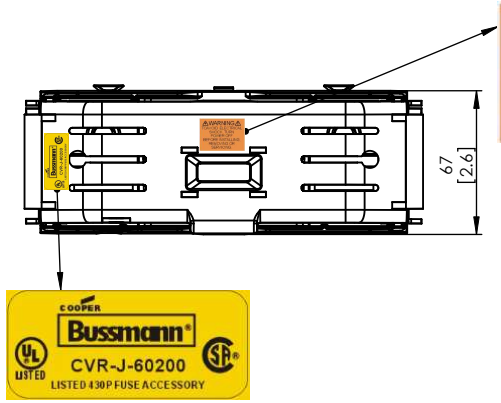

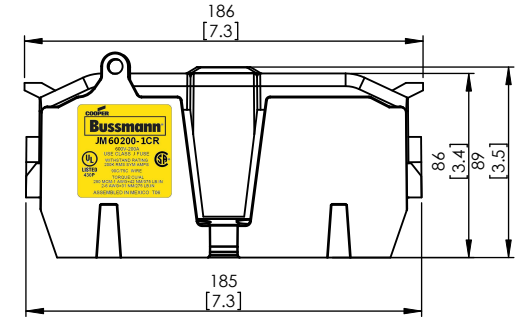

CVR-J-60200

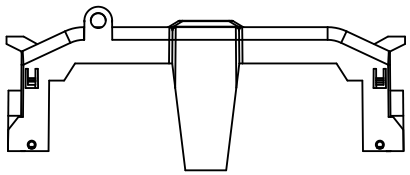

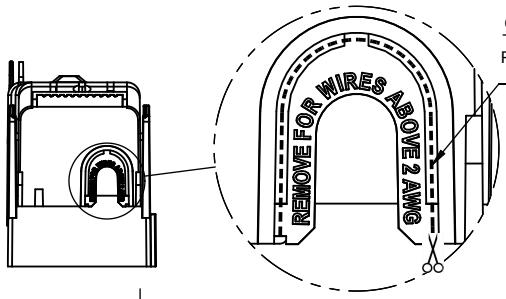

JM60200-1CR WITH CVRI-J-60200 INSTALLED

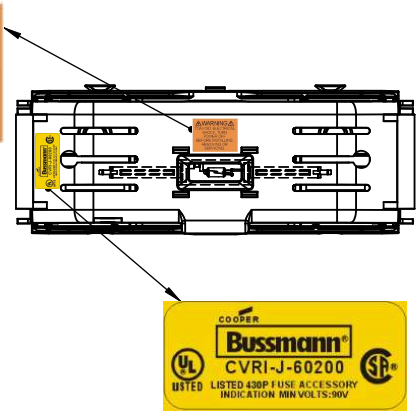

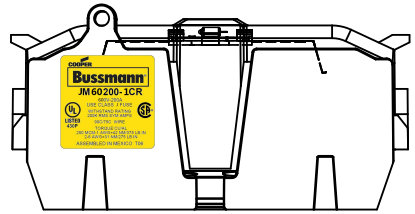

CVRI-J-60200

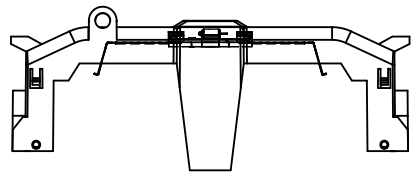

COOPER Bussmann
St. Louis MO 63178

TITLE:

Class J fuse holder-CUST

SCALE:	SIZE:	SHEET:
1:2	A3	6 OF 14

Drawing template A3 : Rev 05

www.Bussmann.com

DESIGN UNITS: METRIC (mm) [INCHES] — UNLESS OTHERWISE SPECIFIED — THIRD ANGLE PROJECTION

JM60200-2CR

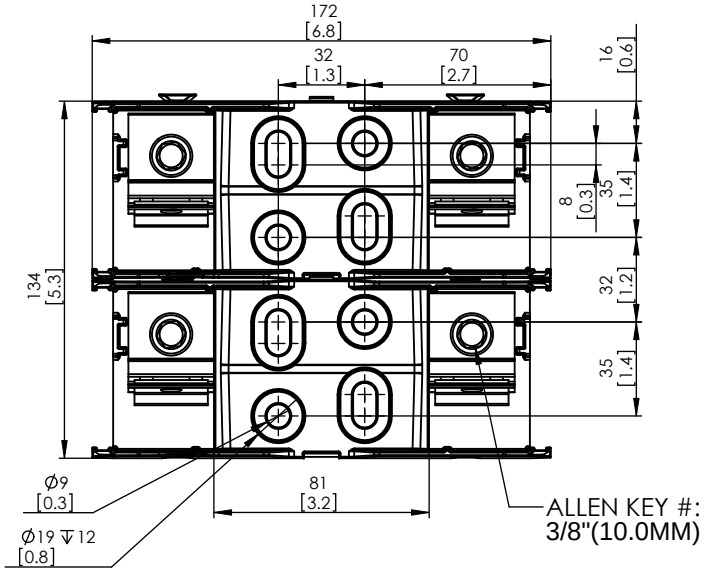

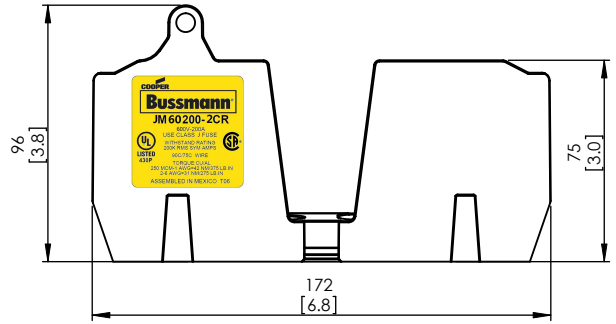

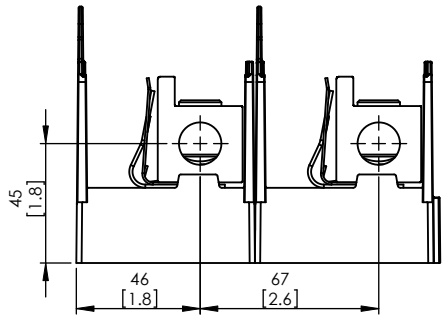

JM60200-2CR WITH CVR-J-60200 INSTALLED

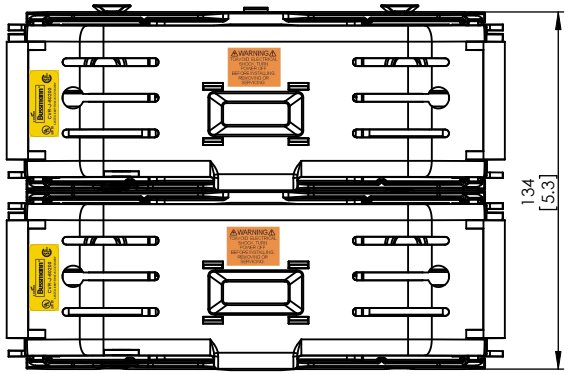

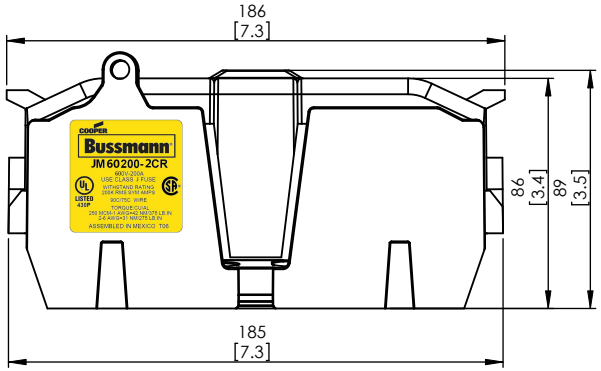

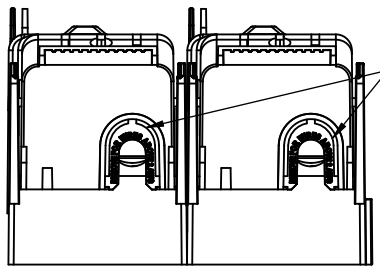

JM60200-2CR WITH CVRI-J-60200 INSTALLED

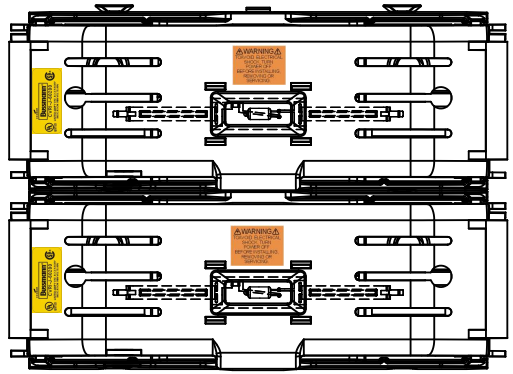

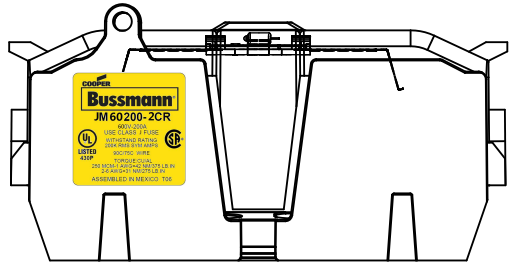

COOPER Bussmann
St. Louis MO 63178

TITLE:

Class J fuse holder-CUST

SCALE:	SIZE:	SHEET:
1:2	A3	7 OF 14

Drawing template A3 : Rev 05

DESIGN UNITS: METRIC (mm) [INCHES] — UNLESS OTHERWISE SPECIFIED — THIRD ANGLE PROJECTION

JM60200-3CR

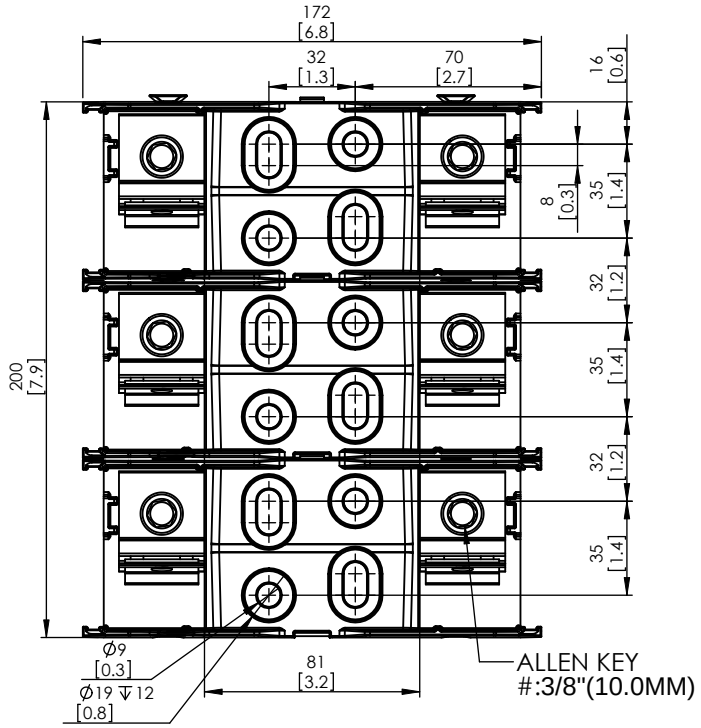

JM60200-3CR WITH CVR-J-60200 INSTALLED

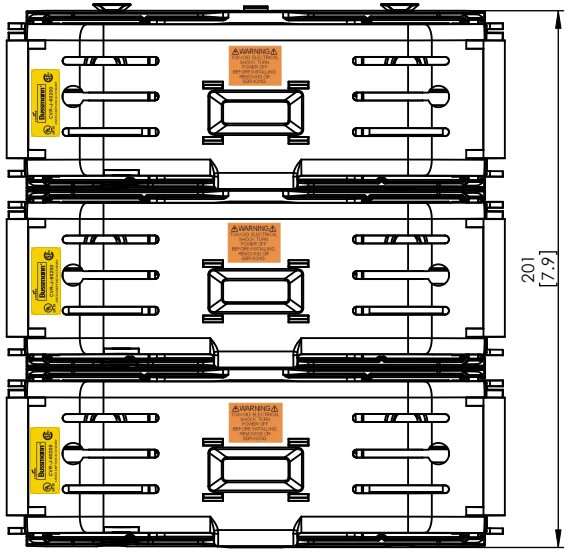

JM60200-3CR WITH CVRI-J-60200 INSTALLED

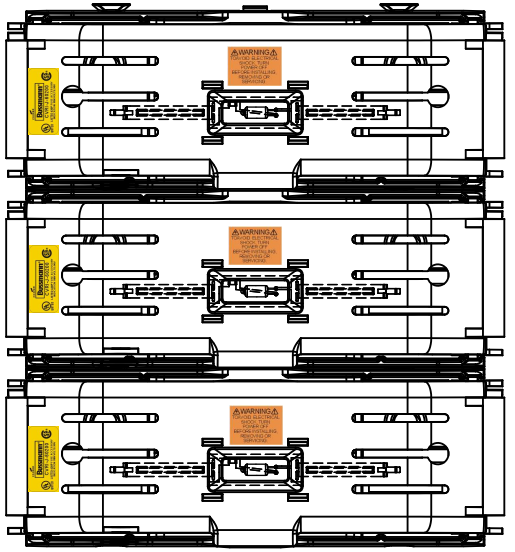

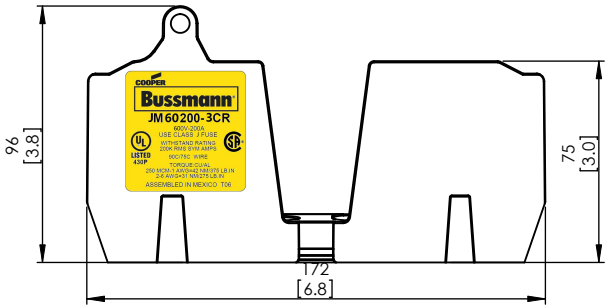

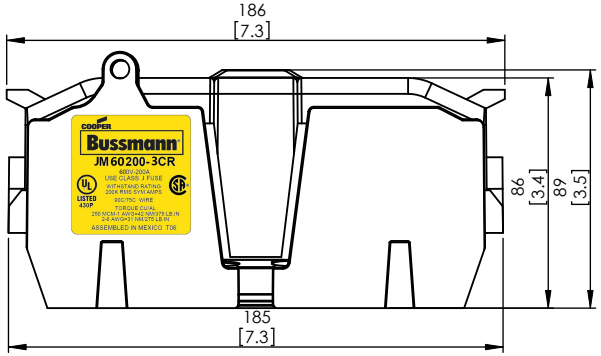

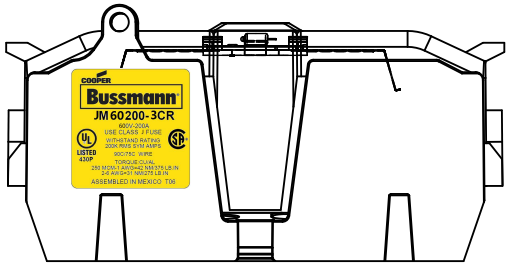

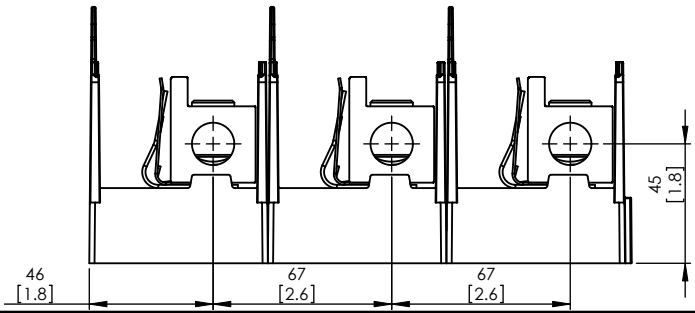

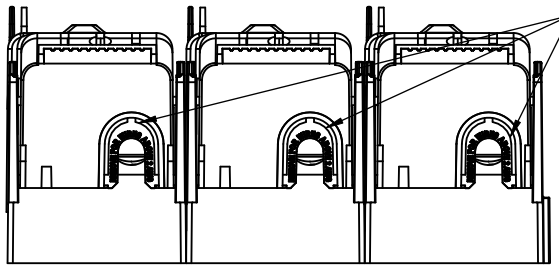

COOPER Bussmann
St. Louis MO 63178

TITLE:

Class J fuse holder-CUST

SCALE:	SIZE:	SHEET:
1:2	A3	8 OF 14

Drawing template A3 : Rev 05

DESIGN UNITS: METRIC (mm) [INCHES] — UNLESS OTHERWISE SPECIFIED — THIRD ANGLE PROJECTION

JM60400-1CR

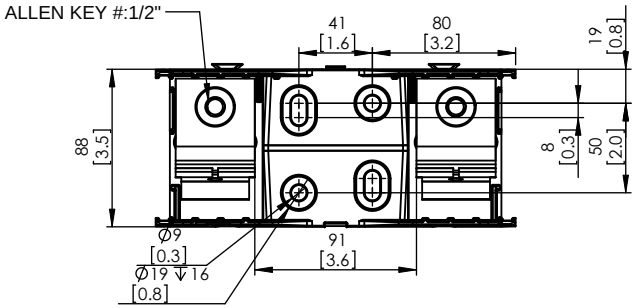

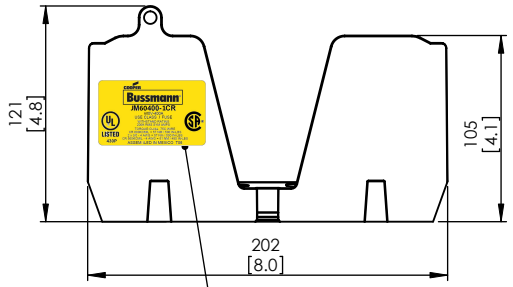



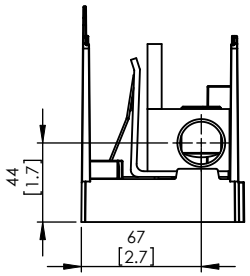

JM60400-1CR WITH CVR-J-60400 INSTALLED

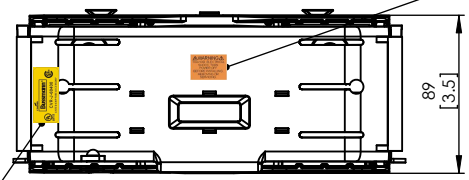



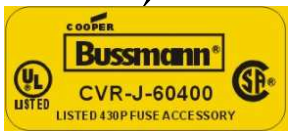

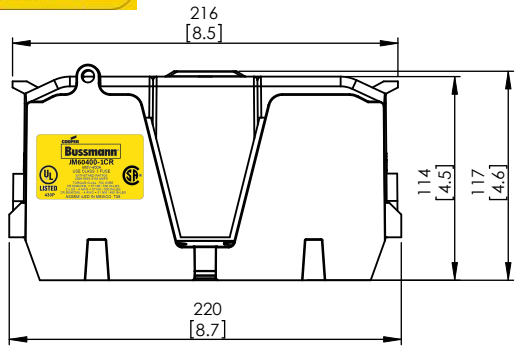

CVR-J-60400

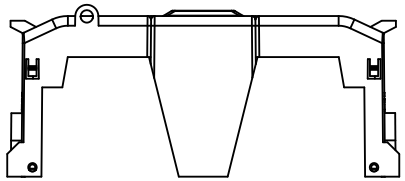

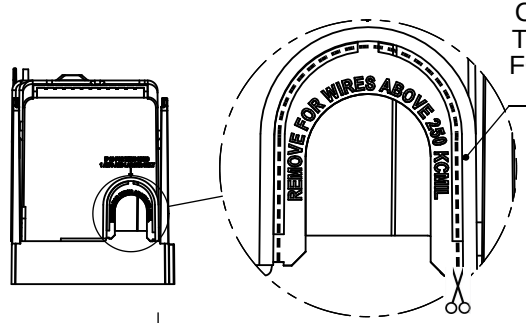

CUT OPEN ALONG THIS DOTTED LINE FOR WIRES ABOVE 250 KCMIL

JM60400-1CR WITH CVRI-J-60400 INSTALLED

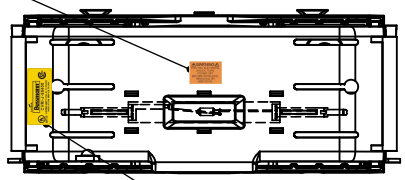



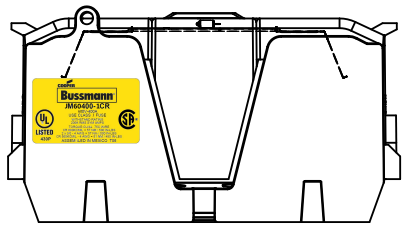

CVRI-J-60400

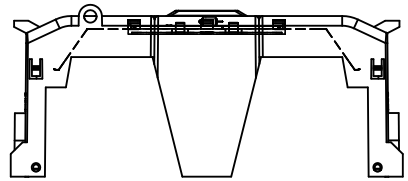

COOPER Bussmann
St. Louis MO 63178

TITLE:

Class J fuse holder-CUST

SCALE:	SIZE:	SHEET:
1:5	A3	9 OF 14

Drawing template A3 : Rev 05

DESIGN UNITS: METRIC (mm) [INCHES] — UNLESS OTHERWISE SPECIFIED — THIRD ANGLE PROJECTION

JM60400-2CR

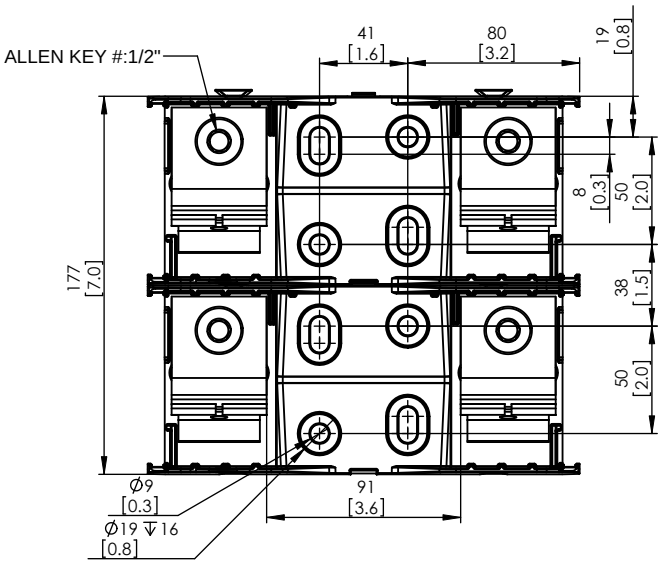

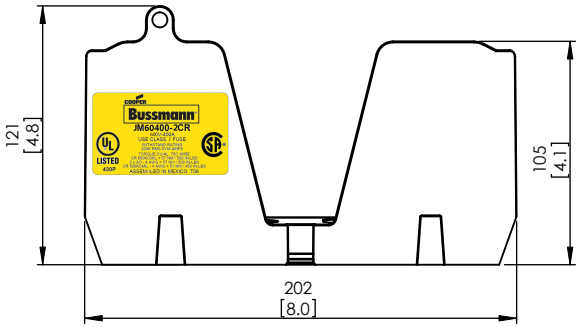

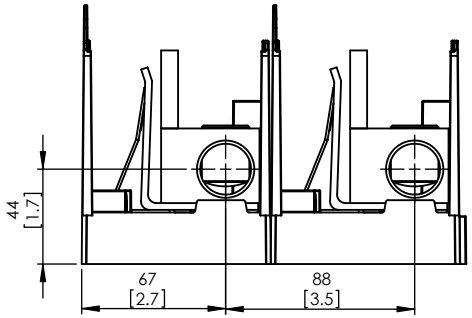

JM60400-2CR WITH CVR-J-60400 INSTALLED

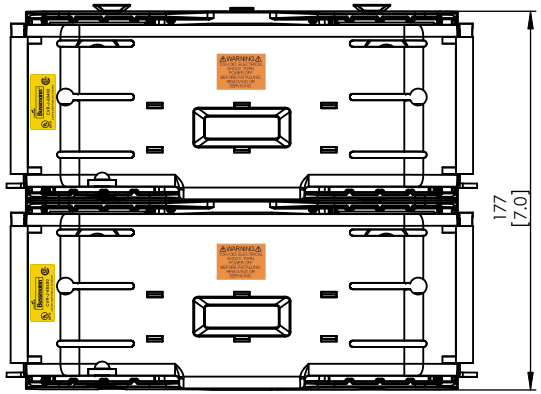

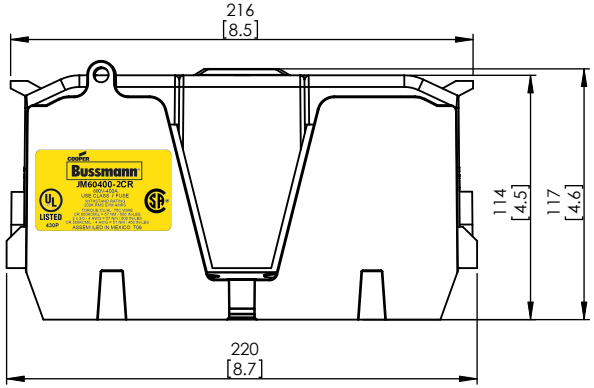

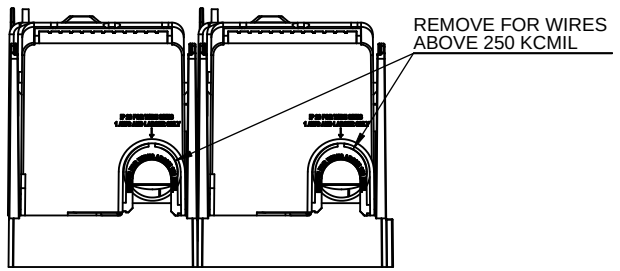

JM60400-2CR WITH CVRI-J-60400 INSTALLED

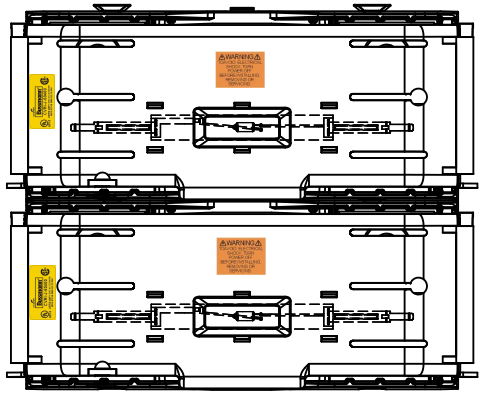

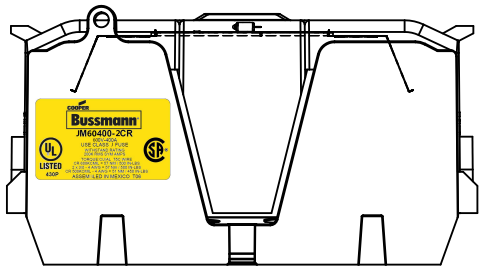

COOPER Bussmann
St. Louis MO 63178

TITLE:

Class J fuse holder-CUST

SCALE:	SIZE:	SHEET:
1:5	A3	10 OF 14

Drawing template A3 : Rev 05

www.Bussmann.com

DESIGN UNITS: METRIC (mm) [INCHES] — UNLESS OTHERWISE SPECIFIED — THIRD ANGLE PROJECTION

JM60400-3CR

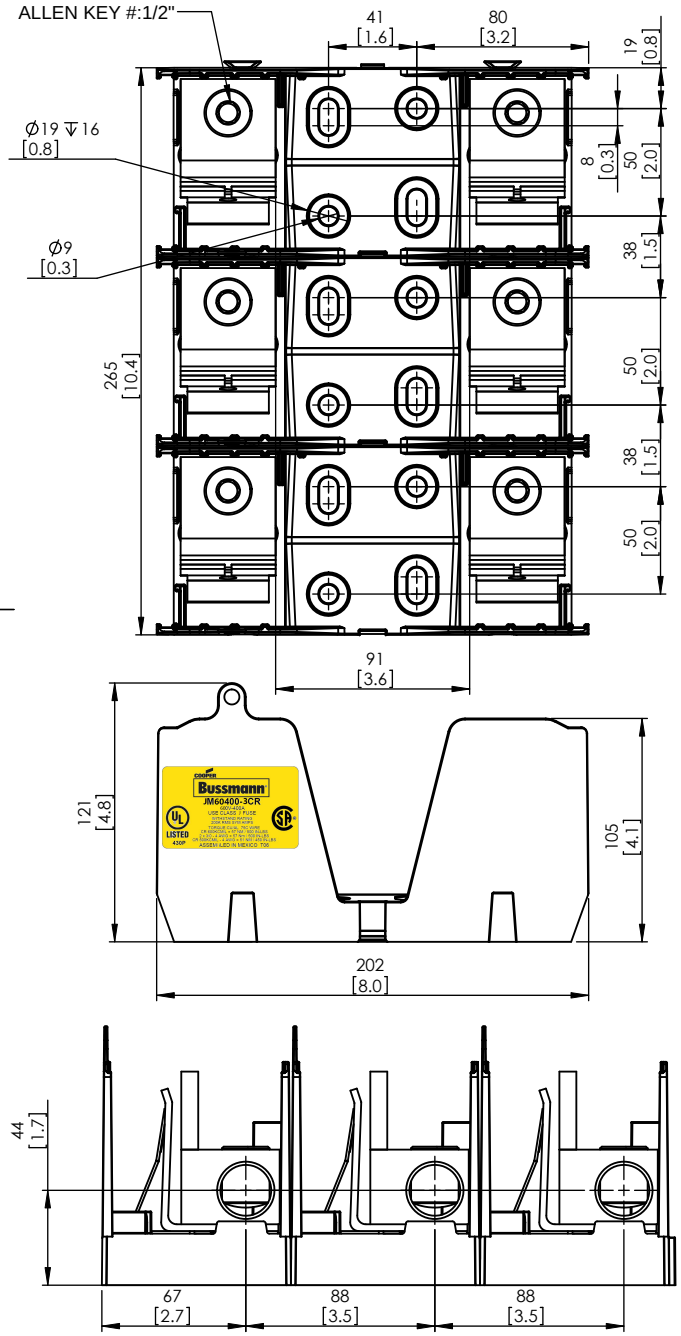

JM60400-3CR WITH CVR-J-60400 INSTALLED

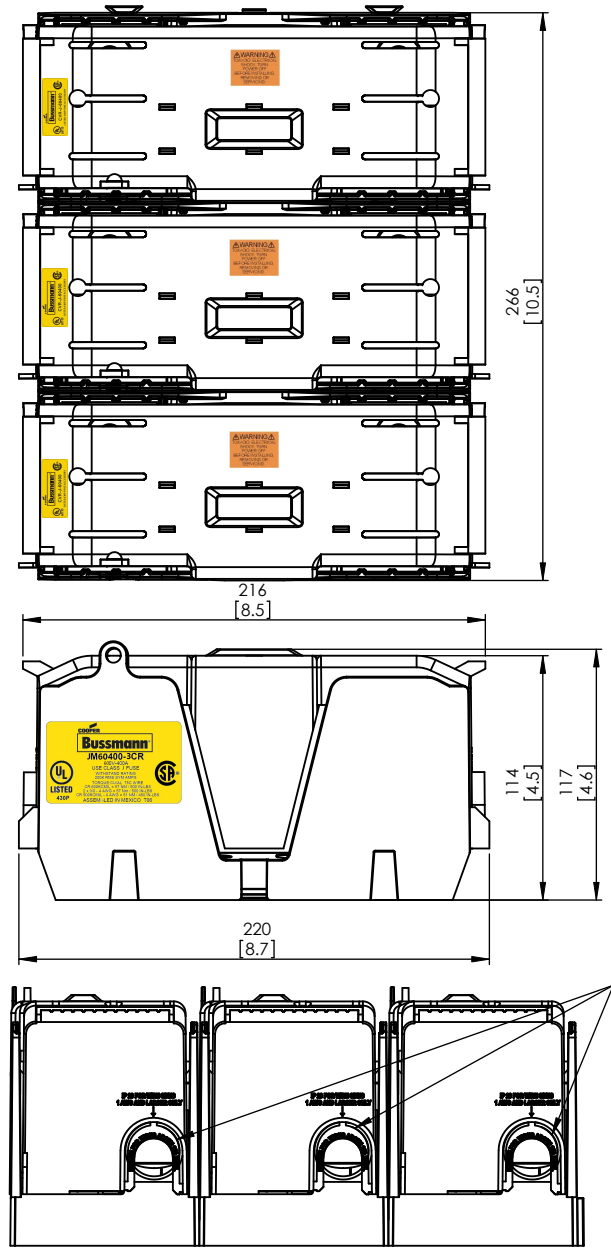

JM60400-3CR WITH CVRI-J-60400 INSTALLED

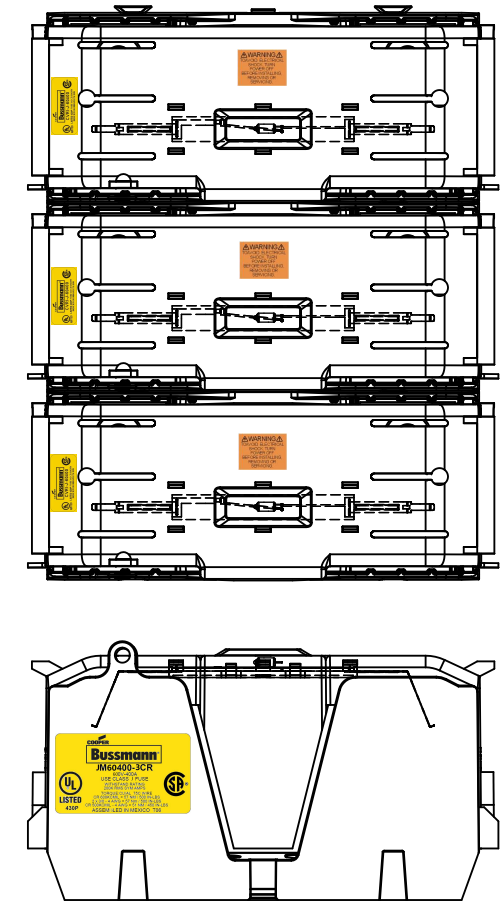

COOPER Bussmann
St. Louis MO 63178

TITLE:

Class J fuse holder-CUST

SCALE:	SIZE:	SHEET:
1:5	A3	11 OF 14

Drawing template A3 : Rev 05

www.Bussmann.com

DESIGN UNITS: METRIC (mm) [INCHES] — UNLESS OTHERWISE SPECIFIED — THIRD ANGLE PROJECTION

JM60600-1CR

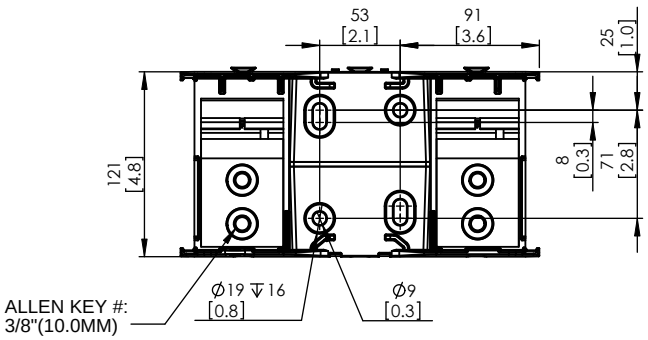

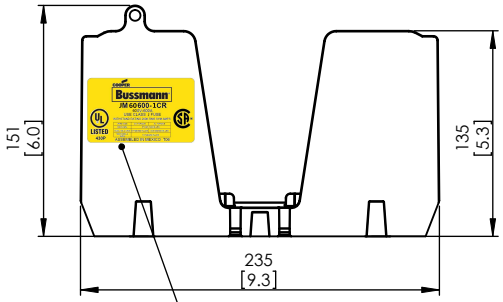



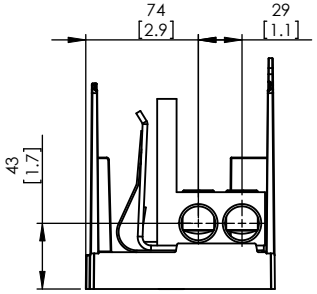

JM60600-1CR WITH CVR-J-60600 INSTALLED

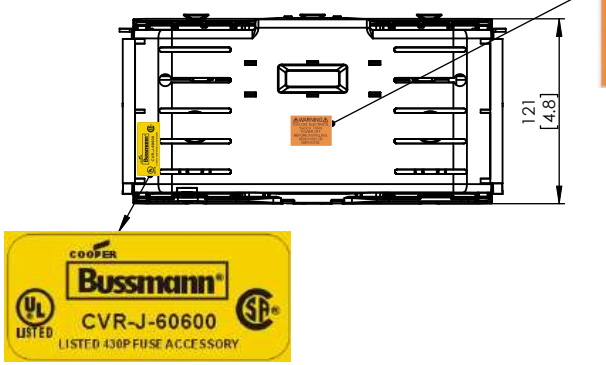

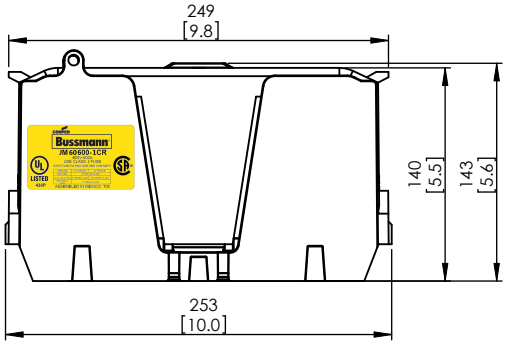

CVR-J-60600

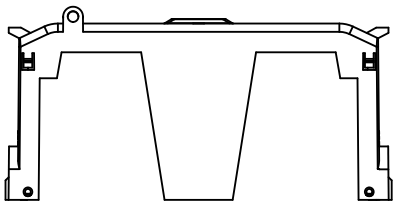

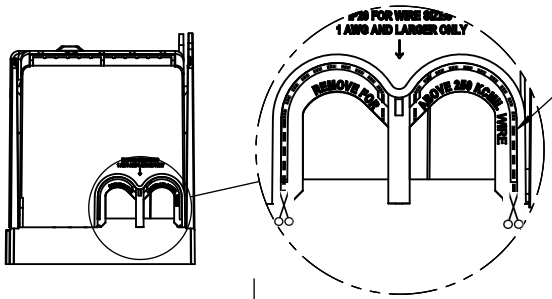

JM60600-1CR WITH CVRI-J-60600 INSTALLED

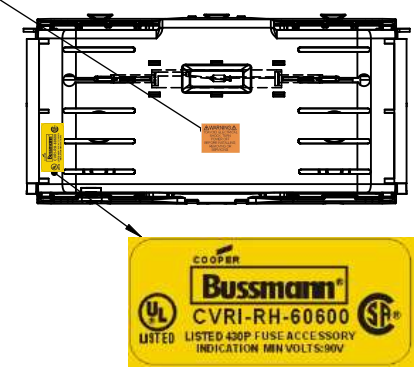

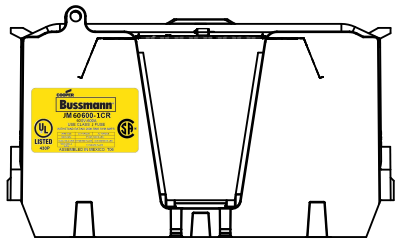

CVRI-J-60600

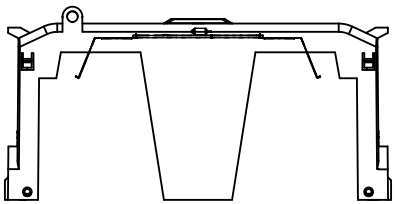

COOPER Bussmann
St. Louis MO 63178

TITLE:

Class J fuse holder-CUST

SCALE:	SIZE:	SHEET:
1:5	A3	12 OF 14

Drawing template A3 : Rev 05

DESIGN UNITS: METRIC (mm) [INCHES] — UNLESS OTHERWISE SPECIFIED — THIRD ANGLE PROJECTION

JM60600-2CR

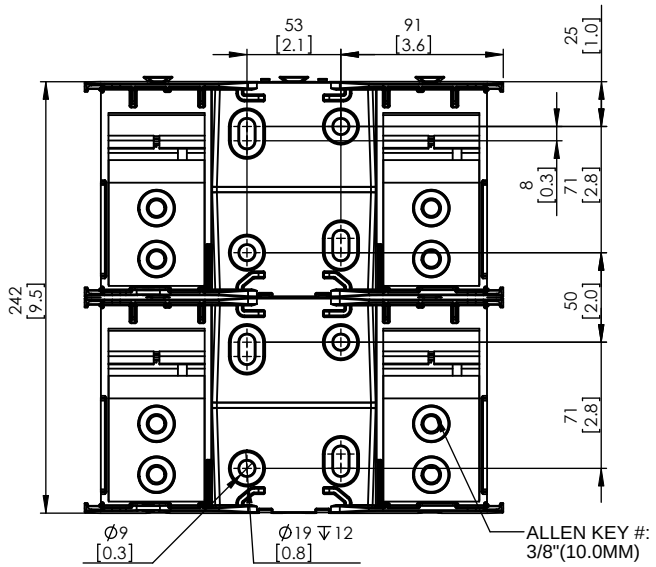

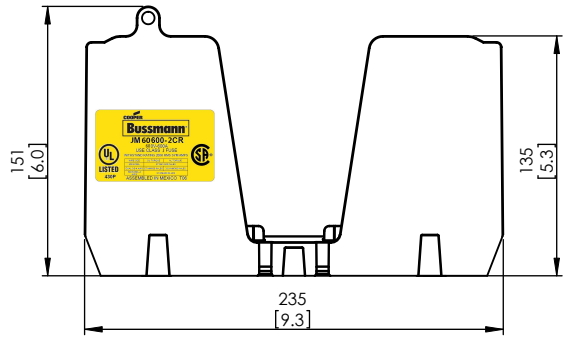

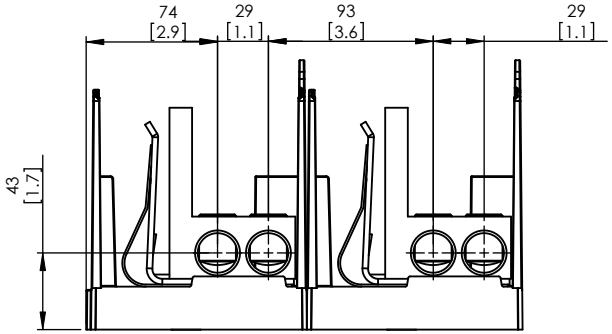

JM60600-2CR WITH CVR-J-60600 INSTALLED

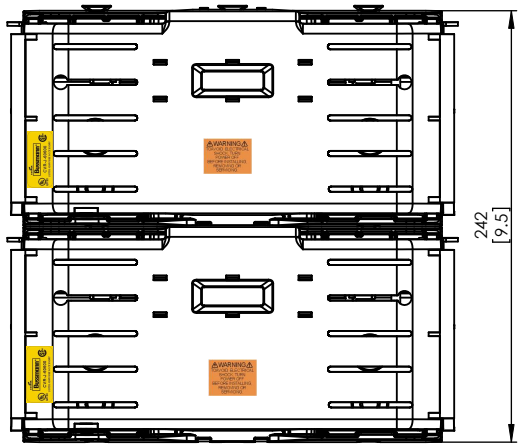

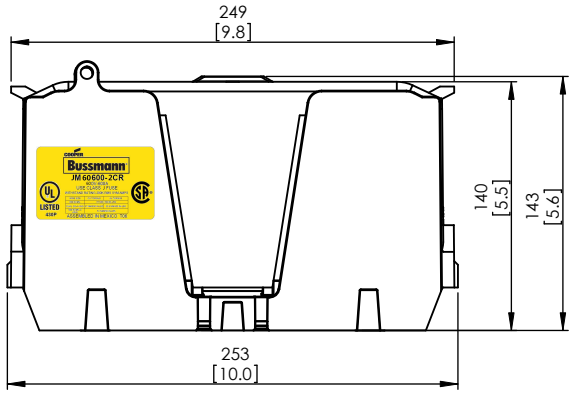

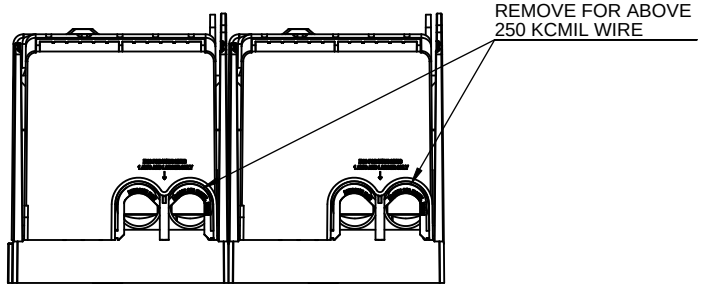

JM60600-2CR WITH CVRI-J-60600 INSTALLED

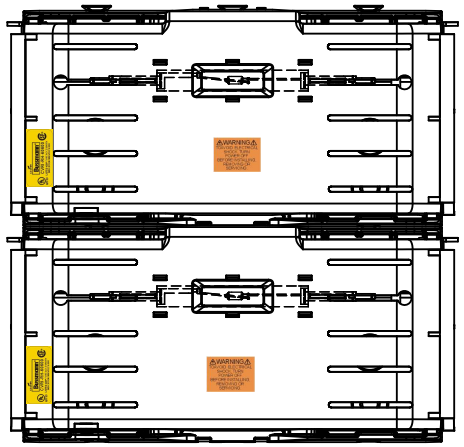

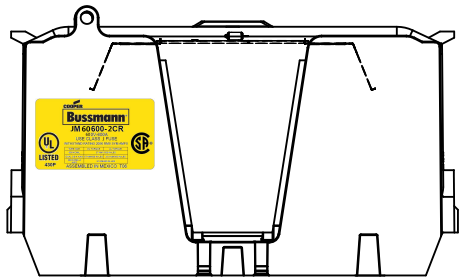

COOPER Bussmann
St. Louis MO 63178

TITLE:

Class J fuse holder-CUST

SCALE:	SIZE:	SHEET:
1:5	A3	13 OF 14

Drawing template A3 : Rev 05

www.Bussmann.com

DESIGN UNITS: METRIC (mm) [INCHES] — UNLESS OTHERWISE SPECIFIED — THIRD ANGLE PROJECTION

JM60600-3CR

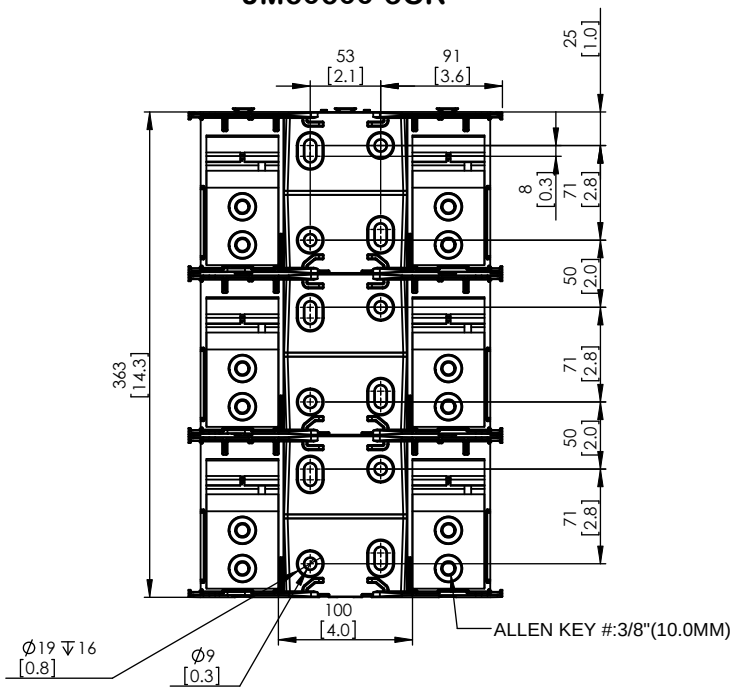

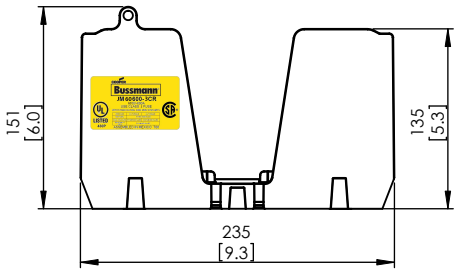

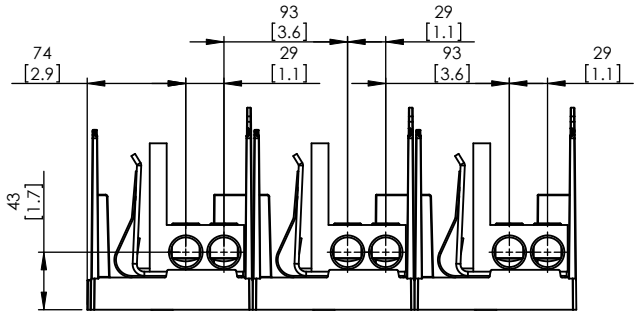

JM60600-3CR WITH CVR-J-60600 INSTALLED

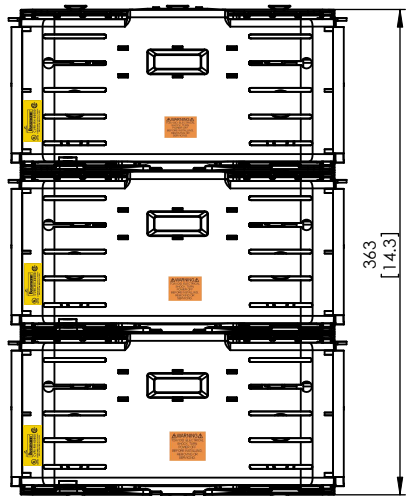

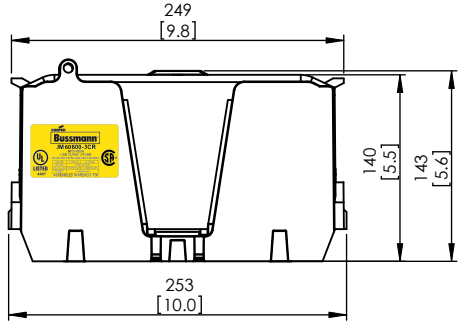

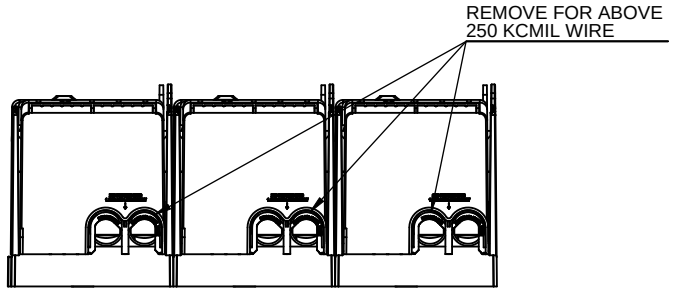

JM60600-3CR WITH CVRI-J-60600 INSTALLED

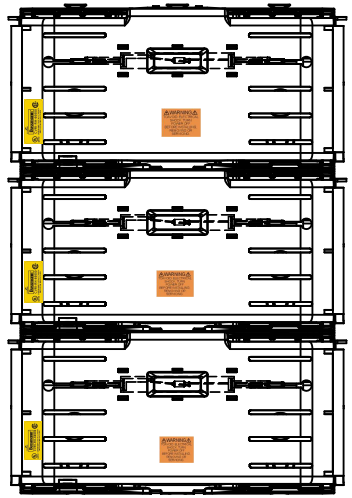

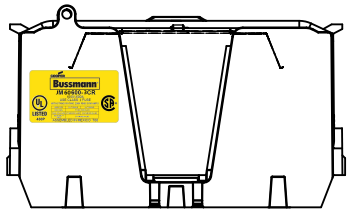

COOPER Bussmann
St. Louis MO 63178

TITLE:

Class J fuse holder-CUST

SCALE:	SIZE:	SHEET:
1:5	A3	14 OF 14

Drawing template A3 : Rev 05

www.Bussmann.com