C-Lube Linear Way MH
Linear Way H



C-Lube Linear Way MH

MH

C-Lube Maintenance-free

long term maintenance free supported!

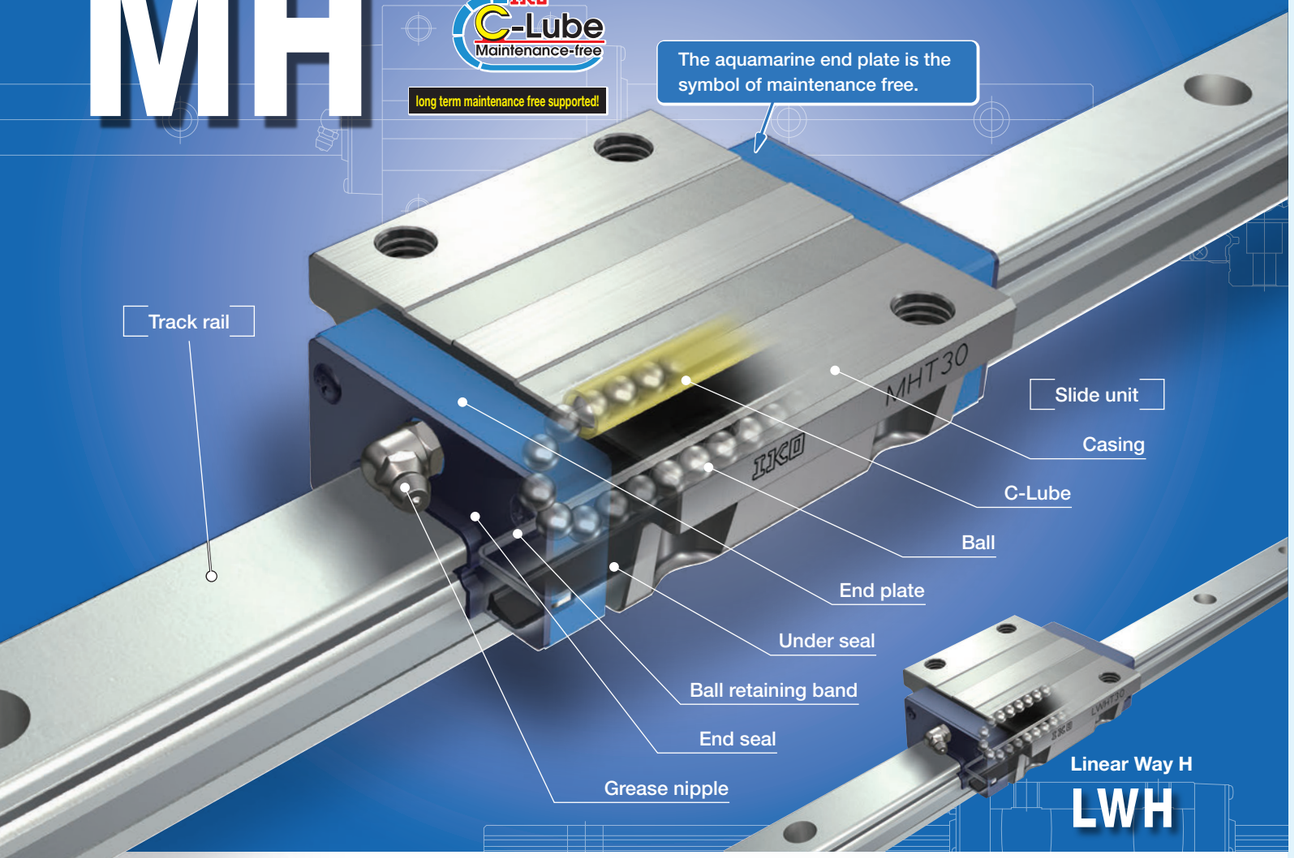

Points

High rigidity series with the largest-class load rating among ball types

1 High rigidity linear motion rolling guides designed to evenly support high load capacity by incorporating large-diameter balls.

Wide range of variations for your needs For details P.I-26

2 As the lineup of 5 types of slide unit shape including the flange type, block type with small width and side mounting type, etc., and 3 types with different slide unit length with same section are available, you can select an optimal product for the specifications of your machine and device.

Stainless steels selections superior in corrosion resistance are listed on lineup. For details P.I-41

3 Products made of stainless steel are highly resistant to corrosion, so that they are suitable for applications where rust prevention oil is not preferred, such as in cleanroom environment.

Series of ultra seal specification for excellent dust protection performance

4 Products of ultra seal specifications have excellent dust protection performance thanks to the combination of the dedicated track rail finished with total ground and slide unit with end seal and under seal of special shapes. Special specification with inner seal further improves dust protection property of the ball circulation section against foreign substances from the upper surface of the track rail.

Identification Number and Specification

Example of an identification number

The specifications of MH and LWH series are indicated by the identification number. Indicate the identification number, consisting of a model code, dimensions, a part code, a dust protection code, a material code, a preload symbol, a classification symbol, an interchangeable code, and any supplemental codes for each specification to apply.

	1	2	3	4	5	1	6	7	8	9	10	11
Non-interchangeable specification												
Assembled set	MHT	G	20	C1	R840				T_1	P		/FV
Interchangeable specification												
Single slide unit	MHT	G	20	C1					T_1	P	S1	/V
Single track rail (1)	LWH		20		R840	B				P	S1	/F
Assembled set	MHT	G	20	C1	R840				T_1	P	S1	/FV

1 **Model** — Model code: Page Ⅱ—91, Page Ⅱ—92

2 **Length of slide unit**

3 **Size** — Dimensions: Page Ⅱ—92

4 **Number of slide units** — Part code: Page Ⅱ—92, Page Ⅱ—93

5 **Length of track rail**

6 **Dust protection specification** — Dust protection code: Page Ⅱ—94

7 **Material type** — Material code: Page Ⅱ—96

8 **Preload amount** — Preload symbol: Page Ⅱ—96

9 **Accuracy class** — Classification symbol: Page Ⅱ—97

10 **Interchangeable** — Interchangeable code: Page Ⅱ—98

11 **Special specification** — Supplemental code: Page Ⅱ—99

Note (1) Indicate "LWH···B" or "LWH" for the model code of the single track rail regardless of the series and the combination of slide unit models.

1N=0.102kgf=0.2248lbs.
1mm=0.03937inch

Identification Number and Specification — Model —

1 Model

C-Lube Linear Way MH (MH series)	Flange type mounting from bottom	: MH
	Flange type mounting from top (2)	: MHT
	Block type mounting from top	: MHD
	Compact block type mounting from top	: MHS
Linear Way H (1) (LWH series)	Flange type mounting from bottom	: LWH (···B)
	Flange type mounting from top (2)	: LWHT (···B)
	Block type mounting from top	: LWHD (···B)
	Compact block type mounting from top	: LWHS (···B)
	Side mounting type	: LWHY

For applicable models and sizes, see Table 1.1 and Table 1.2.
Indicate "LWH···B" or "LWH" for the model code of the single track rail regardless of the series and the combination of slide unit models.

Notes (1) This model has no built-in C-Lube.
(2) Some models may be mounted upward.

Table 1.1 Models and sizes of MH and LWH series

Material	Shape	Length of slide unit	Model	Size 8	10	12	15	20	25	30	35	45	55	65
High carbon steel made	Flange type mounting from bottom	Standard	MH	–	–	–	○	○	○	○	○	○	–	–
			LWH···B	–	–	–	○	○	○	○	○	○	○	○
			MH···M (U)	–	–	–	–	–	○	○	–	–	–	–
			LWH···M (U)	–	–	–	○	○	○	○	○	○	–	–
		Long	MHG	–	–	–	–	○	○	○	○	○	–	–
			LWHG	–	–	–	–	○	○	○	○	○	○	○
	Flange type mounting from top	Standard	MHT	–	–	○(1)	○	○	○	○	○	○	–	–
			LWHT···B	–	–	○(1)(2)	○	○	○	○	○	○	○	○
			MHT···M (U)	–	–	–	–	–	○	○	–	–	–	–
			LWHT···M (U)	–	–	–	○	○	○	○	○	○	–	–
		Long	MHTG	–	–	–	○(1)	○	○	○	○	○	–	–
			LWHTG	–	–	–	–	○	○	○	○	○	○	○
	Block type mounting from top	Standard	MHD	–	–	○	○	–	○	○	○	○	–	–
			LWHD···B	–	–	○(2)	○	–	○	○	○	○	○	○
			MHD···M (U)	–	–	–	–	–	○	○	–	–	–	–
			LWHD···M (U)	–	–	–	○	–	○	○	○	○	–	–
		Long	MHDG	–	–	–	–	–	○	○	○	○	–	–
			LWHDG	–	–	–	–	–	○	○	○	○	○	○
	Compact block type mounting from top	Standard	MHS	–	–	–	○	○	○	○	–	–	–	–
			LWHS···B	–	–	–	○	○	○	○	–	–	–	–
			MHS···M (U)	–	–	–	–	–	○	○	–	–	–	–
			LWHS···M (U)	–	–	–	○	○	○	○	–	–	–	–
		Long	MHSG	–	–	–	○	○	○	○	–	–	–	–
			LWHSG	–	–	–	–	○	○	○	–	–	–	–
	Side mounting type	Standard	LWHY	–	–	–	○	○	○	○	○	○	–	–

Notes (1) This may be mounted upward.
(2) "···B" is not included in the model code.
Remark: For the models indicated in ▭, the interchangeable specification is available.

— Length of Slide Unit · Size · Number of Slide Unit —

2 Length of slide unit

Short	: C	For applicable models and sizes, see Table 1.1 and Table 1.2.
Standard	: No symbol	
Long	: G	

3 Size

8, 10, 12, 15, 20, 25, 30, 35, 45, 55, 65

For applicable models and sizes, see Table 1.1 and Table 1.2.

4 Number of slide units

: C○

For an assembled set, indicates the number of slide units assembled on a track rail. For a single slide unit, only "C1" is specified.

Table 1.2 Models and sizes of MH and LWH series

Material	Shape	Slide unit Length	Model	Size 8	10	12	15	20	25	30	35	45	55	65
Stainless steel made	Flange type mounting from bottom	Standard	LWH···SL	–	–	–	○	○	○	○	–	–	–	–
	Flange type mounting from top	Standard	MHT···SL	○(1)	○(1)	○(1)	○	○	○	○	–	–	–	–
			LWHT···SL	○(1)	○(1)	○(1)	○	○	○	○	–	–	–	–
	Block type mounting from top	Short	MHDC···SL	○	○	○	–	–	–	–	–	–	–	–
			LWHDC···SL	○	○	○	–	–	–	–	–	–	–	–
		Standard	MHD···SL	○	○	○	–	–	–	–	–	–	–	–
			LWHD···SL	○	○	○	–	–	–	–	–	–	–	–
		Long	MHDG···SL	○	○	○	–	–	–	–	–	–	–	–
			LWHDG···SL	○	○	○	–	–	–	–	–	–	–	–
	Compact block type mounting from top	Standard	MHS···SL	–	–	–	○	○	○	○	–	–	–	–
			LWHS···SL	–	–	–	○	○	○	○	–	–	–	–

Note (1) This may be mounted upward.
Remark: For the models indicated in ▭, the interchangeable specification is available.

1N=0.102kgf=0.2248lbs.
1mm=0.03937inch

5 Length of track rail

: R○

Indicate the length of track rail in mm.
For standard and maximum length, see Table 2.1 and Table 2.2.

Table 2.1 Standard and maximum length of high carbon steel track rail

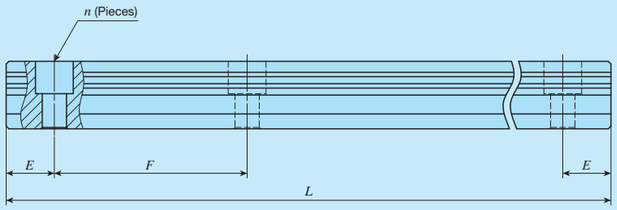

unit: mm

Item \ Identification number	MH 12 LWH12	MH 15 LWH15···B	MH 20 LWH20···B	MH 25 LWH25···B	MH 30 LWH30···B
Standard length L (n)	80 (2) 160 (4) 240 (6) 320 (8) 400 (10) 480 (12) 560 (14) 640 (16) 720 (18)	180 (3) 240 (4) 360 (6) 480 (8) 660 (11) 900 (15) 1 200 (20)	240 (4) 480 (8) 660 (11) 840 (14) 1 020 (17) 1 200 (20) 1 500 (25)	240 (4) 480 (8) 660 (11) 840 (14) 1 020 (17) 1 200 (20) 1 500 (25) 1 980 (33)	480 (6) 640 (8) 800 (10) 1 040 (13) 1 200 (15) 1 520 (19) 2 000 (25)
Pitch of mounting holes F	40	60	60	60	80
E	20	30	30	30	40
Standard E dimensions (1) or higher	5.5	7	8	9	10
Standard E dimensions (1) below	25.5	37	38	39	50
Maximum length (2)	1 480	1 500 (3 000)	1 980 (3 000)	3 000 (3 960)	2 960 (4 000)

Item \ Identification number	MH 35 LWH35···B	MH 45 LWH45···B	LWH55···B	LWH65···B
Standard length L (n)	480 (6) 640 (8) 800 (10) 1 040 (13) 1 200 (15) 1 520 (19)	840 (8) 1 050 (10) 1 260 (12) 1 470 (14) 1 995 (19)	840 (7) 1 200 (10) 1 560 (13) 1 920 (16) 3 000 (25)	1 500 (10) 1 950 (13) 3 000 (20)
Pitch of mounting holes F	80	105	120	150
E	40	52.5	60	75
Standard E dimensions (1) or higher	10	12.5	15	17
Standard E dimensions (1) below	50	65	75	92
Maximum length (2)	2 960 (4 000)	2 940 (3 990)	3 000 (3 960)	3 000 (3 900)

Notes (1) This does not apply to female threads for bellows (supplemental code "/J").
(2) Length up to the value in ( ) can be produced. If needed, please contact IKO.
Remarks 1. A typical identification number is indicated, but is applied to all models of the same size.
2. Indicate "LWH" for series of size 12 or "LWH···B" for series of size 15 or above for the model code of the single track rail regardless of the series and the combination of slide unit models.
3. For ultra seal specification, refer to Table 2.3 and Table 2.4.
4. If not directed, E dimensions for both ends will be the same within the range of standard E dimensions. To change the dimensions, indicate the specified rail mounting hole positions "/E" of special specification. For more information, see page Ⅲ−30.

6 Dust protection specification

Standard specification	: No symbol	For applicable models and sizes, see Table 1.1 and Table 1.2.
Ultra seal specification	: M	Each specification of ultra seal specification with track rail mounting from bottom is in compliance to the ultra seal specification.
Ultra seal specification with track rail mounting from bottom	: MU	Ultra seal specification with track rail mounting from bottom applies to products to fix the track rail on the mounting surface side by pressing in the aluminum alloy caps for rail mounting holes to the mounting hole of the track rail in advance. As the upper surface of the track rail is flat, adhesion to the seal is high and dust protection effect is improved further. For track rail specifications, see Table 2.3 and Table 2.4.

Table 2.2 Standard and maximum length of stainless steel track rail

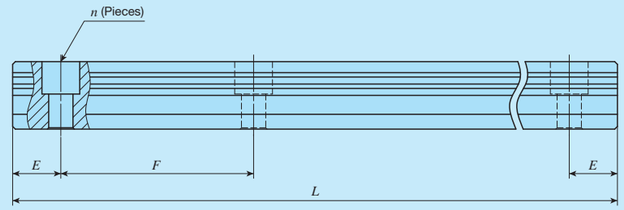

unit: mm

Item \ Identification number	MH 8···SL LWH8···SL	MH 10···SL LWH10···SL	MH 12···SL LWH12···SL	MH 15···SL LWH15···SL	MH 20···SL LWH20···SL	MH 25···SL LWH25···SL	MH 30···SL LWH30···SL
Standard length L (n)	40 (2) 80 (4) 120 (6) 160 (8) 200 (10) 240 (12) 280 (14)	50 (2) 100 (4) 150 (6) 200 (8) 250 (10) 300 (12) 350 (14) 400 (16) 450 (18) 500 (20)	80 (2) 160 (4) 240 (6) 320 (8) 400 (10) 480 (12) 560 (14) 640 (16) 720 (18)	180 (3) 240 (4) 360 (6) 480 (8) 660 (11)	240 (4) 480 (8) 660 (11) 840 (14)	240 (4) 480 (8) 660 (11) 840 (14)	480 (6) 640 (8) 800 (10) 1 040 (13)
Pitch of mounting holes F	20	25	40	60	60	60	80
E	10	12.5	20	30	30	30	40
Standard E dimensions (1) or higher	4.5	5	5.5	7	8	9	10
Standard E dimensions (1) below	14.5	17.5	25.5	37	38	39	50
Maximum length (2)	480 (1 000)	850 (1 000)	1 000 (1 480)	1 200 (1 500)	1 200 (1 980)	1 200 (1 980)	1 200 (2 000)

Notes (1) This does not apply to female threads for bellows (supplemental code "/J").
(2) Length up to the value in ( ) can be produced. If needed, please contact IKO.
Remarks 1. A typical identification number is indicated, but is applied to all models of the same size.
2. Indicate "LWH" for the model code of the single track rail regardless of the series and the combination of slide unit models.
3. If not directed, E dimensions for both ends will be the same within the range of standard E dimensions. To change the dimensions, indicate the specified rail mounting hole positions "/E" of special specification. For more information, see page Ⅲ−30.

1N=0.102kgf=0.2248lbs.
1mm=0.03937inch

Table 2.3 Standard and maximum length of ultra seal specification high carbon steel track rail

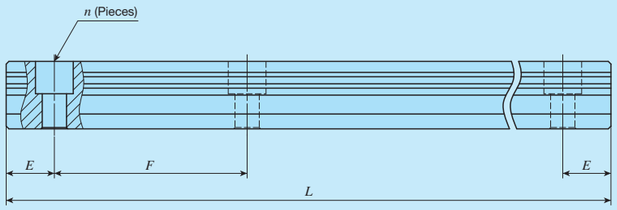

unit: mm

Item \ Identification number	LWH15···M	LWH20···M	MH 25···M LWH25···M	MH 30···M LWH30···M	LWH35···M	LWH45···M
Standard length L (n)	180 (3) 240 (4) 360 (6) 480 (8) 660 (11)	240 (4) 480 (8) 660 (11) 840 (14) 1 020 (17) 1 200 (20) 1 500 (25)	240 (4) 480 (8) 660 (11) 840 (14) 1 020 (17) 1 200 (20) 1 500 (25)	480 (6) 640 (8) 800 (10) 1 040 (13) 1 200 (15) 1 520 (19)	480 (6) 640 (8) 800 (10) 1 040 (13) 1 200 (15) 1 520 (19)	840 (8) 1 050 (10) 1 260 (12) 1 470 (14) 1 995 (19)
Pitch of mounting holes F	60	60	60	80	80	105
E	30	30	30	40	40	52.5
Standard E dimensions (1) or higher	7	8	9	10	10	12.5
Standard E dimensions (1) below	37	38	39	50	50	65
Maximum length	1 500	1 980	3 000	2 960	2 960	2 940
Maximum number of butt-jointing track rails	3	3	3	3	3	3
Maximum length of butt-jointing track rail	4 200	5 640	8 700	8 480	8 480	8 295

Note (1) This does not apply to female threads for bellows (supplemental code "/J").
Remarks 1. A typical identification number is indicated, but is applied to all models of the same size.
2. If not directed, E dimensions for both ends will be the same within the range of standard E dimensions. To change the dimensions, indicate the specified rail mounting hole positions "/E" of special specification. For more information, see page Ⅲ−30.

Table 2.4 Standard and maximum length of ultra seal specification with track rail mounting from bottom

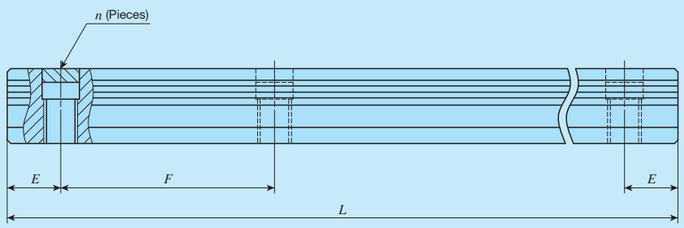

unit: mm

Item \ Identification number	LWH15···MU	LWH20···MU	MH 25···MU LWH25···MU	MH 30···MU LWH30···MU	LWH35···MU	LWH45···MU
Standard length L (n)	180 (3) 240 (4) 360 (6) 480 (8) 660 (11)	240 (4) 480 (8) 660 (11) 840 (14) 1 020 (17) 1 200 (20) 1 500 (25)	240 (4) 480 (8) 660 (11) 840 (14) 1 020 (17) 1 200 (20) 1 500 (25)	480 (6) 640 (8) 800 (10) 1 040 (13) 1 200 (15) 1 520 (19)	480 (6) 640 (8) 800 (10) 1 040 (13) 1 200 (15) 1 520 (19)	840 (8) 1 050 (10) 1 260 (12) 1 470 (14) 1 995 (19)
Pitch of mounting holes F	60	60	60	80	80	105
E	30	30	30	40	40	52.5
Standard E dimensions (1) or higher	7	8	9	10	10	12.5
Standard E dimensions (1) below	37	38	39	50	50	65
Maximum length	1 500	1 980	3 000	2 960	2 960	2 940
Maximum number of butt-jointing track rails	3	3	3	3	3	3
Maximum length of butt-jointing track rail	4 200	5 640	8 700	8 480	8 480	8 295

Note (1) This does not apply to female threads for bellows (supplemental code "/J").
Remarks 1. A typical identification number is indicated, but is applied to all models of the same size.
2. Track rail mounting bolt is not included.
3. If not directed, E dimensions for both ends will be the same within the range of standard E dimensions. To change the dimensions, indicate the specified rail mounting hole positions "/E" of special specification. For more information, see page Ⅲ−30.

7 Material type

High carbon steel made	: No symbol	For applicable models and sizes, see Table 1.1 and Table 1.2.
Stainless steel made (1)	: SL	

Note (1) Mount a standard grease nipple (brass) on the stainless steel type, too. Stainless steel grease nipple is also available. If needed, please contact IKO.

8 Preload amount

Clearance	: T_0	Specify this item for an assembled set or a single slide unit.
Standard	: No symbol	For details of the preload amount, see Table 3.
Light preload	: T_1	For applicable preload types, see Table 4.
Medium preload	: T_2	
Heavy preload	: T_3	

Table 3 Preload amount

Item / Preload type	Preload symbol	Preload amount N	Operational conditions
Clearance	T_0	0 (2)	・Very light motion
Standard	(No symbol)	0 (3)	・Light and precise motion
Light preload	T_1	$0.02C_0$	・Almost no vibrations ・Load is evenly balanced ・Light and precise motion
Medium preload	T_2	$0.05C_0$	・Medium vibration ・Medium overhung load
Heavy preload	T_3	$0.08C_0$	・Operation with vibration and/or shock ・Overhanging load applied ・Heavy cutting

Notes (2) There is zero or subtle clearance.
(3) Indicates zero or minimal amount of preload.
Remark: C_0 indicates the basic static load rating.

Table 4 Application of preload

Size	Preload type (preload symbol)				
	Clearance (T_0)	Standard (No symbol)	Light preload (T_1)	Medium preload (T_2)	Heavy preload (T_3)
8	○	○	○	–	–
10	○	○	○	–	–
12	○	○	○	–	–
15	–	○	○	○	○
20	–	○	○	○	○
25	–	○	○	○	○
30	–	○	○	○	○
35	–	○	○	○	○
45	–	○	○	○	○
55	–	○	○	○	○
65	–	○	○	○	○

Remark: The mark ▭ indicates that interchangeable specification products are available.

1N=0.102kgf=0.2248lbs.
1mm=0.03937inch

9 Accuracy class

High	: H	For interchangeable specification products, assemble a slide unit and a track rail of the same accuracy class. For details of accuracy class, see Table 5.1 and Table 5.2. For applicable accuracy class, see Table 6.
Precision	: P	
Super precision	: SP	

Table 5.1 Tolerance and allowance (Series of size 15 or higher)

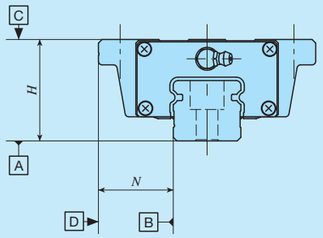

Flange type, block type, and compact block type

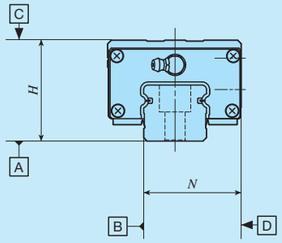

Side mounting type

unit: mm

Item \ Class (classification symbol)	High (H)	Precision (P)	Super precision (SP)
Dim. H tolerance	±0.040	±0.020	±0.010
Dim. N tolerance	±0.050	±0.025	±0.015
Dim. variation of H (1)	0.015	0.007	0.005
Dim. variation of N (1)	0.020	0.010	0.007
Dim. variation of H for multiple assembled sets (2)	0.035	0.025	–
Slide unit against the A surface Parallelism during running on the C surface	See Fig. 1.1		
Slide unit against the B surface Parallelism during running on the D surface	See Fig. 1.1		

Notes (1) It means the size variation between slide units mounted on the same track rail.
(2) Applicable to the interchangeable specifications.

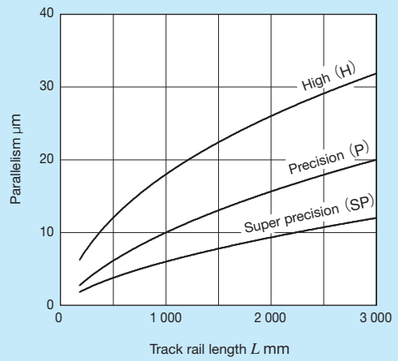

Fig. 1.1 Parallelism in operation (series of Size 15 or higher)

Table 5.2 Tolerance and allowance (Series of size 8 to 12)

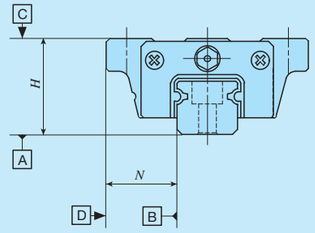

unit: mm

Item \ Class (classification symbol)	High (H)	Precision (P)
Dim. H tolerance	±0.020	±0.010
Dim. N tolerance	±0.025	±0.015
Dim. variation of H (1)	0.015	0.007
Dim. variation of N (1)	0.020	0.010
Dim. variation of H for multiple assembled sets (2)	0.030	0.020
Parallelism in operation of the slide unit C surface to A surface	See Fig. 1.2	
Parallelism in operation of the slide unit D surface to B surface	See Fig. 1.2	

Notes (1) It means the size variation between slide units mounted on the same track rail.
(2) Applicable to the interchangeable specifications.

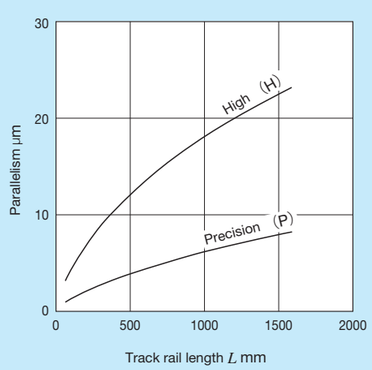

Fig. 1.2 Parallelism in operation (Series of size 8 to 12)

Table 6 Application of accuracy class

Size	Class (classification symbol) High (H)	Precision (P)	Super precision (SP)
8	○	○	–
10	○	○	–
12	○	○	–
15	○	○	○
20	○	○	○
25	○	○	○
30	○	○	○
35	○	○	○
45	○	○	○
55	○	○	○
65	○	○	○

Remark: The mark ▭ indicates that interchangeable specification products are available.

10 Interchangeable

S1 specification	: S1	This is specified for the interchangeable specifications. Assemble a track rail and a slide unit with the same interchangeable code. When using in combination with different interchangeable codes, please contact IKO. Note that the combination of interchangeable codes will not have any effect on accuracy. For applicable models and sizes, see Table 1.1 and Table 1.2. "No symbol" is indicated for non-interchangeable specification.
S2 specification	: S2	
Non-interchangeable specification	: No symbol	

1N=0.102kgf=0.2248lbs.
1mm=0.03937inch

11 Special specification

/A, /BS, /D, /E, /F, /I, /J○, /L○, /LF○, /MA, /MN, /N, /PS, /Q, /RE, /T, /U, /UR, /V○, /W○, /Y○, /Z○

For applicable special specifications, see Table 7.1, Table 7.2, Table 7.3, and Table 7.4.
For combination of multiple special specifications, see Table 8.
For details of special specification, see page Ⅲ−29.

Table 7.1 Application of special specifications (Interchangeable specification and slide unit specification)

Special specification	Supplemental code	Size										
		8	10	12	15	20	25	30	35	45	55	65
Stainless steel end plate (1)	/BS	×	×	×	○	○	○	○	×	×	×	×
Female threads for bellows (2)	/J○	×	×	×	○	○	○	○	○	○	○	○
No end seal	/N	○	○	○	○	○	○	○	○	○	○	○
With C-Lube plate (1)	/Q	○	○	○	○	○	○	○	○	○	○	○
Special environment seal (1)	/RE	×	×	×	○	○	○	○	×	×	×	×
Under seal	/U	○	○	○	×(3)	×(3)	×(3)	×(3)	×(3)	×(3)	×(3)	×(3)
Double end seals	/V○	×	×	×	○	○	○	○	○	○	○	○
Scrapers	/Z○	×	×	×	○	○	○	○	○	○	○	○

Notes (1) Applicable to LWH series.
(2) Not applicable to stainless steel made products.
(3) Attached as standard.

Table 7.2 Application of special specifications (Interchangeable specification and track rail specification)

Special specification	Supplemental code	Size										
		8	10	12	15	20	25	30	35	45	55	65
Specified rail mounting hole positions	/E	○	○	○	○	○	○	○	○	○	○	○
Caps for rail mounting holes	/F	×	×	○	○	○	○	○	○	○	○	○
Female threads for bellows (1)	/J	×	×	×	○	○	○	○	○	○	○	○
Black chrome surface treatment	/LR	×	×	×	○	○	○	○	○	○	○	○
Without track rail mounting bolt	/MN	○	○	○	○	○	○	○	○	○	○	○
Butt-jointing track rails	/T	×	×	×	○	○	○	○	○	○	○	○

Note (1) Not applicable to stainless steel made products.

Table 7.3 Application of special specifications (Interchangeable specification and assembled set)

Special specification	Supplemental code	Size										
		8	10	12	15	20	25	30	35	45	55	65
Stainless steel end plate (1)	/BS	×	×	×	○	○	○	○	×	×	×	×
Opposite reference surfaces arrangement	/D	○	○	○	○	○	○	○	○	○	○	○
Specified rail mounting hole positions	/E	○	○	○	○	○	○	○	○	○	○	○
Caps for rail mounting holes	/F	×	×	○	○	○	○	○	○	○	○	○
Female threads for bellows (2)	/J○	×	×	×	○	○	○	○	○	○	○	○
Black chrome surface treatment	/L○	×	×	×	○	○	○	○	○	○	○	○
Fluorine black chrome surface treatment	/LF○	×	×	×	○	○	○	○	○	○	○	○
With track rail mounting bolt (3)	/MA	○	○	○	○	○	○	○	○	○	×	×
Without track rail mounting bolt (1)	/MN	○	○	○	○	○	○	○	○	○	○	○
No end seal	/N	○	○	○	○	○	○	○	○	○	○	○
With C-Lube plate (1)	/Q	○	○	○	○	○	○	○	○	○	○	○
Special environment seal (1)	/RE	×	×	×	○	○	○	○	×	×	×	×
Butt-jointing track rails	/T	×	×	×	○	○	○	○	○	○	○	○
Under seal	/U	○	○	○	×(5)	×(5)	×(5)	×(5)	×(5)	×(5)	×(5)	×(5)
Double end seals	/V○	×	×	×	○	○	○	○	○	○	○	○
Specified grease (4)	/Y○	×	×	×	○	○	○	○	○	○	○	○
Scrapers	/Z○	×	×	×	○	○	○	○	○	○	○	○

Notes (1) Applicable to LWH series.
(2) Not applicable to stainless steel made products.
(3) Applicable to MH series.
(4) MH series is applicable only to /YCG.
(5) Attached as standard.

Table 7.4 Application of special specifications (Non-interchangeable specification)

Special specification	Supplemental code	Size										
		8	10	12	15	20	25	30	35	45	55	65
Butt-jointing track rails	/A	○	○	○(1)	○	○	○	○	○	○	○	○
Stainless steel end plate (2) (3)	/BS	×	×	×	○	○	○	○	×	×	×	×
Opposite reference surfaces arrangement (3)	/D	○	○	○	○	○	○	○	○	○	○	○
Specified rail mounting hole positions	/E	○	○	○	○	○	○	○	○	○	○	○
Caps for rail mounting holes (4)	/F	×	×	○	○	○	○	○	○	○	○	○
Inspection sheet	/I	○	○	○	○	○	○	○	○	○	○	○
Female threads for bellows (3)	/J○	×	×	×	○	○	○	○	○	○	○	○
Black chrome surface treatment	/L○	○(5)	○(5)	○(5)	○	○	○	○	○	○	○	○
Fluorine black chrome surface treatment	/LF○	×	×	×	○	○	○	○	○	○	○	○
With track rail mounting bolt (6)	/MA	○	○	○	○	○	○	○	○	○	×	×
Without track rail mounting bolt (2) (4)	/MN	○	○	○	○	○	○	○	○	○	○	○
No end seal (7)	/N	○	○	○	○	○	○	○	○	○	○	○
Rail cover plate for track rail (7) (8)	/PS	×	×	×	×	×	○	○	○	○	○	○
With C-Lube plate (2) (3) (7)	/Q	○	○	○	○	○	○	○	○	○	○	○
Special environment seal (2) (7)	/RE	×	×	×	○	○	○	○	×	×	×	×
Under seal	/U	○	○	○	×(9)	×(9)	×(9)	×(9)	×(9)	×(9)	×(9)	×(9)
Inner seal (10)	/UR	×	×	×	×	×	○	○	×	×	×	×
Double end seals	/V○	×	×	×	○	○	○	○	○	○	○	○
A pair of multiple assembled sets (3)	/W○	○	○	○	○	○	○	○	○	○	○	○
Specified grease (11)	/Y○	○	○	○	○	○	○	○	○	○	○	○
Scrapers	/Z○	×	×	×	○	○	○	○	○	○	○	○

Notes (1) Not applicable to high carbon steel made products.
(2) Applicable to LWH series.
(3) This does not apply to side mounting type (LWHY).
(4) This does not apply to ultra seal specification with track rail mounting from bottom (LWH···MU).
(5) Applicable only to "LR".
(6) Applicable to MH series.
(7) This does not apply to ultra seal specification (LWH···M) and ultra seal specification with track rail mounting from bottom (LWH···MU).
(8) Not applicable to stainless steel made products.
(9) Attached as standard.
(10) Applicable only to MH···M(U).
(11) MH series is applicable only to /YCG.

Table 8 Combination of supplemental codes

	A	BS	D	E	F	I	J	L	LF	MA	MN	N	PS	Q	RE	T	U	UR	V	W	Y
BS	○																				
D	○	○																			
E	–	○	–																		
F	○	○	○	○																	
I	○	○	○	○	○																
J	○	○	○	○	○	○															
L	○(1)	○	○	○	○	○	○														
LF	○	○	○	○	○	○	○	–													
MA	○	–	○	○	○	○	○	○	○												
MN	○	○	○	○	○	○	○	○	○	–											
N	○	○	○	○	–	○	–	○	○	○	○										
PS	–	○	○	○	–	○	–	–	–	○	○	–									
Q	○	○	○	○	○	○	–	○	○	–	○	○	○								
RE	○	○	○	○	○	○	○	○	○	–	○	–	–	○							
T	–	○	○	○	○	–	–	○	○	○	○	○	–	○	○						
U	○	–	○	○	○	○	–	○	–	○	○	–	–	○	–	–					
UR	–	–	○	○	○	○	○	○	○	○	–	–	–	–	–	–	–				
V	○	○	○	○	○	○	●	○	○	○	○	–	○	–	○	○	–	○			
W	○	○	○	–	○	○	○	○	○	○	○	○	○	○	○	–	○	○	○		
Y	○	○	○	○	○	○	○	○	–	○	○	○	○	–	○	○	○	–	○	○	
Z	○	○	○	○	○	○	●	○	○	○	○	–	–	–	○	○	–	○	●	○	○

Note (1) Contact IKO for the case of size 8 to 12.
Remarks 1. The combination of "−" shown in the table is not available.
2. Contact IKO for the combination of the interchangeable specification marked with ●.
3. When using multiple types for combination, please indicate by arranging the symbols in alphabetical order.

1N=0.102kgf=0.2248lbs.
1mm=0.03937inch

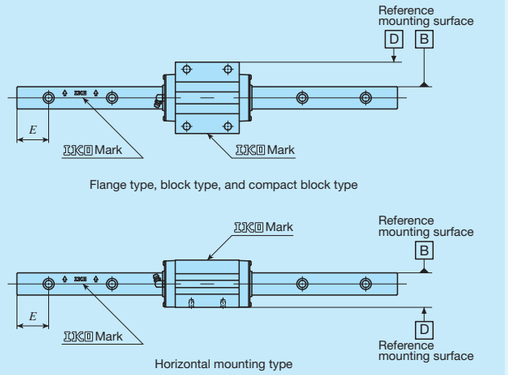

Fig. 2 Specified rail mounting hole positions (Supplemental code /E)

Remark: For details of specified rail mounting hole positions (supplemental code /E), see page Ⅲ−30.

Table 9.1 Dimension of female threads for bellows (Supplemental code Single unit: /J Assembled set: /J /JJ)

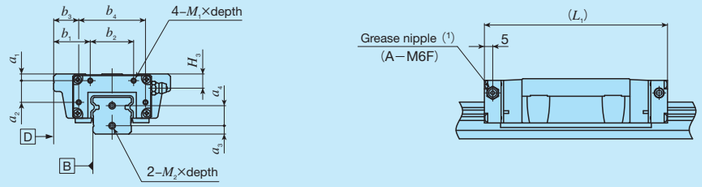

unit: mm

Identification number		Slide unit									Track rail		
		a_1	a_2	b_1	b_2	b_3	b_4	M_1×depth	L_1(2)	H_3	a_3	a_4	M_2×depth
MH(T) 15	LWH(T) 15···B	3	7	15.5	16	9.5	28	M3× 6	83	6.5	4	8	M3× 6
–	LWH(T) 15···M								86				
MHTG 15	–								99				
MH(T) 20	LWH(T) 20···B	4	10	20.5	22	13.5	36	M3× 6	99	8.5	5	9	M4× 8
–	LWH(T) 20···M(U)								103				
MH(T)G 20	LWH(T)G 20								128				
MH(T) 25	LWH(T) 25···B	4	13	22	26	15	40	M3× 6	110	8.5	5	12	M4× 8
MH(T) 25···M(U)	LWH(T) 25···M(U)								115				
MH(T)G 25	LWH(T)G 25								133				
MH(T) 30	LWH(T) 30···B	5	17	28	34	20	50	M3× 6	128	11	6	14	M4× 8
MH (T) 30···M (U)	LWH(T) 30···M(U)								133				
MH(T)G 30	LWH(T)G 30								154				
MH(T) 35	LWH(T) 35···B	6	20	30	40	20	60	M3× 6	137	13	7	15	M4× 8
–	LWH(T) 35···M(U)								143				
MH(T)G 35	LWH(T)G 35								165				
MH(T) 45	LWH(T) 45···B	7	26	35	50	23	74	M4× 8	160	15	8	19	M5×10
–	LWH(T) 45···M(U)								167				
MH(T)G 45	LWH(T)G 45								203				
–	LWH(T) 55···B	7	32	40	60	27	86	M4× 8	196	17	8	25	M5×10
–	LWH(T)G 55								248				
–	LWH(T) 65···B	10	46	50	70	32	106	M5×10	240	20	10	28	M6×12
–	LWH(T)G 65								314				

Notes (1) The specification and mounting positions of grease nipple are different from those of the standard specification product. Provided grease nipple for size 15 models is NPB2 type (special specification). For details of dimensions, contact IKO.
(2) Dimensions of the specification that female threads for bellows are fitted to both ends of the slide unit are indicated.
Remark: This is also applicable to stainless steel models of the same size.

Table 9.2 Dimension of female threads for bellows (Supplemental code Single unit: /J Assembled set: /J /JJ)

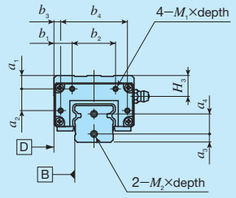

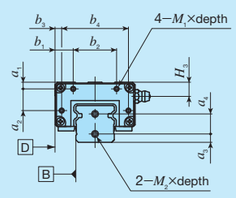

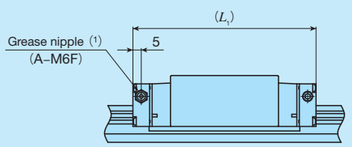

unit: mm

Identification number		Slide unit									Track rail		
		a_1	a_2	b_1	b_2	b_3	b_4	M_1×depth	L_1(2)	H_3	a_3	a_4	M_2×depth
MHD 15	LWHD 15···B	7	7	9	16	3	28	M3× 6	83	10.5	4	8	M3× 6
–	LWHD 15···M								86				
MHS 15	LWHS 15···B	3	7	9	16	3	28	M3× 6	83	6.5	4	8	M3× 6
–	LWHS 15···M(U)								86				
MHSG 15	–								99				
MHS 20	LWHS 20···B	4	10	11	22	4	36	M3× 6	99	8.5	5	9	M4× 8
–	LWHS 20···M(U)								103				
MHSG 20	LWHSG 20								128				
MHD 25	LWHD 25···B	8	13	11	26	4	40	M3× 6	110	12.5	5	12	M4× 8
MHD 25···M(U)	LWHD 25···M(U)								115				
MHDG 25	LWHDG 25								133				
MHS 25	LWHS 25···B	4	13	11	26	4	40	M3× 6	110	8.5	5	12	M4× 8
MHS 25···M(U)	LWHS 25···M(U)								115				
MHSG 25	LWHSG 25								133				
MHD 30	LWHD 30···B	8	17	13	34	5	50	M3× 6	128	14	6	14	M4× 8
MHD 30···M(U)	LWHD 30···M(U)								133				
MHDG 30	LWHDG 30								154				
MHS 30	LWHS 30···B	5	17	13	34	5	50	M3× 6	128	11	6	14	M4× 8
MHS 30···M(U)	LWHS 30···M(U)								133				
MHSG 30	LWHSG 30								154				
MHD 35	LWHD 35···B	13	20	15	40	5	60	M3× 6	137	20	7	15	M4× 8
–	LWHD 35···M(U)								143				
MHDG 35	LWHDG 35								165				
MHD 45	LWHD 45···B	17	26	18	50	6	74	M4× 8	160	25	8	19	M5×10
–	LWHD 45···M(U)								167				
MHDG 45	LWHDG 45								203				
–	LWHD 55···B	17	32	20	60	7	86	M4× 8	196	27	8	25	M5×10
–	LWHDG 55								248				
–	LWHD 65···B	10	46	28	70	10	106	M5×10	240	20	10	28	M6×12
–	LWHDG 65								314				

Notes (1) The specification and mounting positions of grease nipple are different from those of the standard specification product. Provided grease nipple for size 15 models is NPB2 type (special specification). For details of dimensions, contact IKO.
(2) Dimensions of the specification that female threads for bellows are fitted to both ends of the slide unit are indicated.
Remark: This is also applicable to stainless steel models of the same size.

Table 10 Dimension of slide unit with C-Lube plate (Supplemental code /Q)

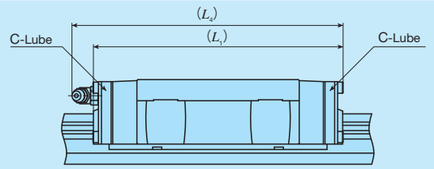

unit: mm

Identification number	L_1	L_4
LWHDC 8···SL	26	–
LWHT 8···SL	32	–
LWHD 8···SL		
LWHDG 8···SL	38.5	–
LWHDC 10···SL	34	–
LWHT 10···SL	42	–
LWHD 10···SL		
LWHDG 10···SL	50	–
LWHDC 12···SL	44	48
LWHT 12	56	60
LWHD 12		
LWHDG 12···SL	68	72
LWH 15···B	75	78
LWH 20···B	92	105
LWHG 20	121	134
LWH 25···B	105	116
LWHG 25	127	139
LWH 30···B	125	135
LWHG 30	151	161
LWH 35···B	134	146
LWHG 35	162	174
LWH 45···B	160	170
LWHG 45	203	214
LWH 55···B	196	207
LWHG 55	248	258
LWH 65···B	246	253
LWHG 65	321	328

Remarks 1. The dimensions of the slide unit with C-Lube at both ends are indicated.
2. A typical identification number is indicated, but is applied to all LWH series models of the same size.

Table 11 H_1 dimension with under seal (Supplemental code /U)

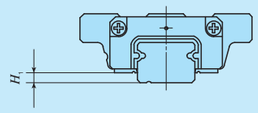

unit: mm

Size	H_1
8	1.5
10	1.8
12	3.2 (1)

Note (1) The dimensions are the same as those before mounting of under seal.

Table 12 Dimension of slide unit with double end seals (Supplemental code Single unit: /V Assembled set: /V /VV)

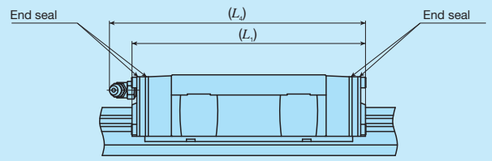

unit: mm

Identification number		L_1	L_4
MH 15	LWH 15···B	72	77
–	LWH 15···M(U)	71	76
MHTG 15	–	88	93
MH 20	LWH 20···B	91	104
–	LWH 20···M(U)	90	103
MHG 20	LWHG 20	119	133
MH 25	LWH 25···B	104	116
MH 25···M(U)	LWH 25···M(U)	103	115
MHG 25	LWHG 25	127	139
MH 30	LWH 30···B	122	134
MH 30···M(U)	LWH 30···M(U)	121	
MHG 30	LWHG 30	148	160
MH 35	LWH 35···B	133	146
–	LWH 35···M(U)		
MHG 35	LWHG 35	161	173
MH 45	LWH 45···B	159	170
–	LWH 45···M(U)	158	
MHG 45	LWHG 45	202	213
–	LWH 55···B	195	206
–	LWHG 55	247	258
–	LWH 65···B	241	251
–	LWHG 65	316	325

Remarks 1. The dimensions of the slide unit with double end seals at both ends are indicated.
2. A typical identification number is indicated, but is applied to all models of the same size.

Table 13 Dimension of slide unit with scrapers (Supplemental code Single unit: /Z Assembled set: /Z /ZZ)

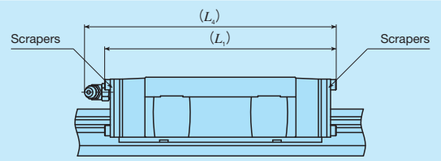

unit: mm

Identification number		L_1	L_4
MH 15	LWH 15···B	73	75
–	LWH 15···M(U)	72	74
MHTG 15	–	89	91
MH 20	LWH 20···B	91	104
–	LWH 20···M(U)	90	100
MHG 20	LWHG 20	119	133
MH 25	LWH 25···B	104	116
MH 25···M(U)	LWH 25···M(U)	103	112
MHG 25	LWHG 25	126	138
MH 30	LWH 30···B	124	135
MH 30···M(U)	LWH 30···M(U)	123	131
MHG 30	LWHG 30	150	161
MH 35	LWH 35···B	133	146
–	LWH 35···M(U)		
MHG 35	LWHG 35	161	174
MH 45	LWH 45···B	160	170
–	LWH 45···M(U)	159	
MHG 45	LWHG 45	203	214
–	LWH 55···B	196	207
–	LWHG 55	248	258
–	LWH 65···B	242	251
–	LWHG 65	317	326

Remarks 1. The dimensions of the slide unit with scraper at both ends are indicated.
2. A typical identification number is indicated, but is applied to all models of the same size.

Lubrication

In the series of size 8 to 12 of MH series and LWH series, lithium-soap base grease (MULTEMP PS No.2, KYODO YUSHI) is pre-packed, and in the series of size 15 to 65, lithium-soap base grease with extreme-pressure additive (Alvania EP grease 2, [Shell Lubricants Japan K.K.]) is pre-packed. Additionally, MH series has C-Lube placed in the recirculation part of balls, so that the interval for reapplicating lubricant can be extended and maintenance works such as grease job can be reduced significantly.
MH series and LWH series have grease nipple or oil hole as indicated in Table 15. Supply nozzles fit to each shapes of grease nipple and dedicated supplying equipment (miniature greasers) fit to oil holes are also available. For order of these parts for lubrication, see Table 13 and Table 14.1 on Page Ⅲ—23, and Table 15 on page Ⅲ—24.

Table 14 Oil hole specifications

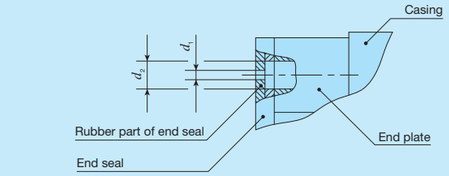

unit: mm

Size	d_1	d_2
8	0.5	1.5
10		

Table 15 Parts for lubrication

Size	Grease nipple type (1)	Applicable supply nozzle type	Bolt size of female threads for piping
8	Oil hole	Miniature greaser	–
10			
12	A-M3	A-5120V A-5240V B-5120V B-5240V	–
15	A-M4		M4
20	B-M6	Grease gun available on the market	M6
25			
30			
35	JIS type 4		PT1/8
45			
55			
65			

Note (1) For grease nipple specification, see Table 14.1 and Table 14.2 on page Ⅲ—23.
Remark: Stainless steel grease nipple is also available. If needed, please contact IKO.

1N=0.102kgf=0.2248lbs.
1mm=0.03937inch

Dust Protection

The slide units of MH series and LWH series are equipped with end seals and under seals as standard for dust protection. However, if large amount of contaminant or dust are floating, or if large particles of foreign substances such as chips or sand may adhere to the track rail, it is recommended to cover the whole unit with bellows or telescope type shield, etc.
MH series and LWH series are provided with specific bellows. The bellows are easy to mount and provide excellent dust protection. If needed, please refer to Ⅲ−26 for ordering.
And, track rail mounting from bottom with no mounting hole on the upper surface of the track rail (Figure 3) is also available. If needed, contact IKO.

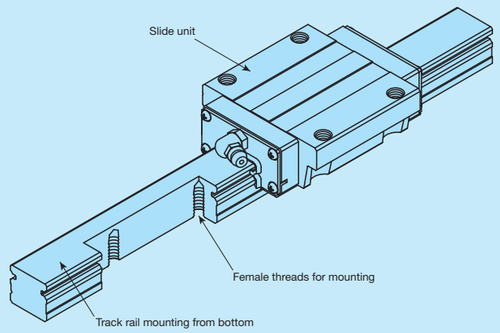

Fig. 3 Track rail mounting from bottom specification

Precaution for Use

❶ Mounting surface, reference mounting surface and typical mounting structure

When mounting the MH series and LWH series, properly align the reference mounting surfaces B and D of the track rail and slide unit with the reference mounting surface of the table and bed and fix them. (See Fig. 4.)
The reference mounting surfaces B and D and mounting surfaces A and C are precisely ground. Machining the mounting surface of the table and bed, such as machine or device, to high accuracy and mounting them properly will ensure stable linear motion with high accuracy.
Reference mounting surface of the slide unit is the opposite side of the IKO mark. The track rail reference mounting surface is identified by locating the IKO mark on the top surface of the track rail. It is the side surface above the mark (in the direction of the arrow). (See Fig. 5.)

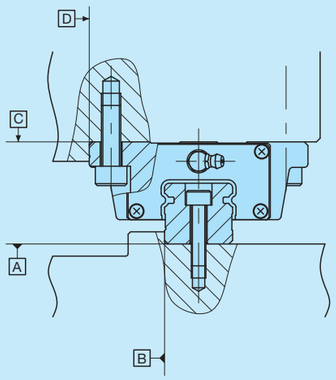

Fig. 4 Reference mounting surface and typical mounting structure

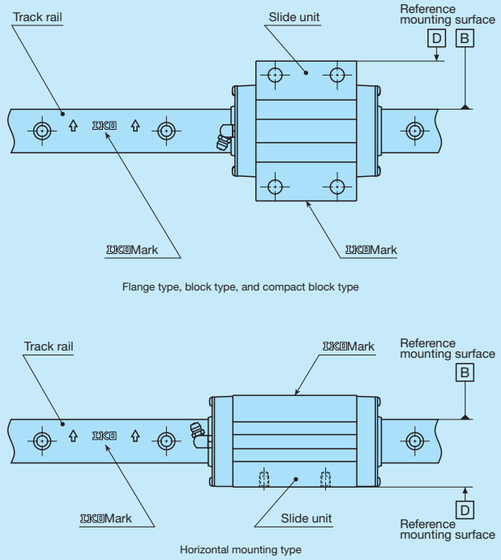

Fig. 5 Reference mounting surface

❷ Shoulder height and corner radius of the reference mounting surface

For the opposite corner of the mating reference mounting, it is recommended to have relieved fillet as indicated in Fig. 6. Recommended value for the shoulder height and corner radius on the mating side is indicated in Table 16.

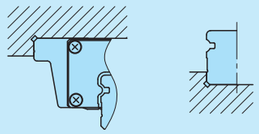

Fig. 6 Corner of the mating reference mounting

Table 16 Shoulder height and corner radius of the reference mounting surface

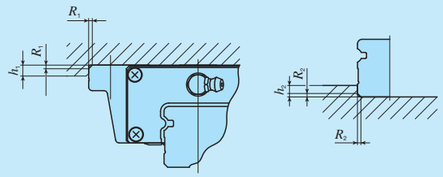

unit: mm

Size	Mounting part of slide unit		Mounting part of track rail	
	Shoulder height h_1	Corner radius R_1 (Maximum)	Shoulder height h_2	Corner radius R_2 (Maximum)
8	3.5(4)(1)	0.5	1.6(2)	0.2
10	4.5(5)(1)	0.5	1.9(2)	0.2
12	6	0.5	2.7(2)	0.7
15	4	0.5	3	0.5
20	5	0.5	3	0.5
25	6	1	4	1
30	8	1	5	1
35	8	1	6	1
45	8	1.5	7	1.5
55	10	1.5	8	1.5
65	10	1.5	10	1.5

Notes (1) The values in ( ) are applied to MHD and LWHD.
(2) For models with under seals (supplemental code "/U"), it is recommended to use the values 0.6 mm smaller than the values in the table.

❸ Tightening torque for fixing screw

Typical tightening torque for mounting of the MH series and LWH series to the steel mating member material is indicated in Table 17. When vibration and shock of the machine or device are large, fluctuating load is large, or moment load is applied, fix it by using the torque 1.2 to 1.5 times larger than the value indicated in the table as necessary. If the mating member material is cast iron or aluminum alloy, reduce the tightening torque depending on the strength characteristics of the mating member material.

Table 17 Tightening torque for fixing screw

Bolt size	Tightening torque N・m		
	High carbon steel-made screw		Stainless steel-made screw
	Size: 12	Size: 15 to 65	
M 1.6×0.35	–	–	0.15
M 2 ×0.4	–	–	0.31
M 2.3×0.4	–	–	0.49
M 2.6×0.45	–	–	0.70
M 3 ×0.5	1.3	–	1.1
M 4 ×0.7	2.9	4.1	2.5
M 5 ×0.8	–	8.0	5.0
M 6 ×1	–	13.6	8.5
M 8 ×1.25	–	32.7	20.4
M10 ×1.5	–	63.9	40.0
M12 ×1.75	–	110	–
M14 ×2	–	175	–
M16 ×2	–	268	–

Remark: The tightening torque is calculated based on strength division 8.8 for high carbon steel bolts in product size 12, strength division 12.9 for carbon steel bolts in product size 15 to 65, and property division A2-70 for stainless steel bolts.

1N=0.102kgf=0.2248lbs.
1mm=0.03937inch

IKO C-Lube Linear Way MH

Flange type mounting from bottom

Shape	MH · LWH
Size	15 · 20 · 25 · 30 · 35 · 45 · 55 · 65

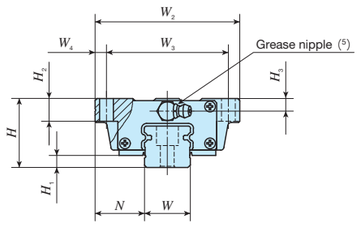

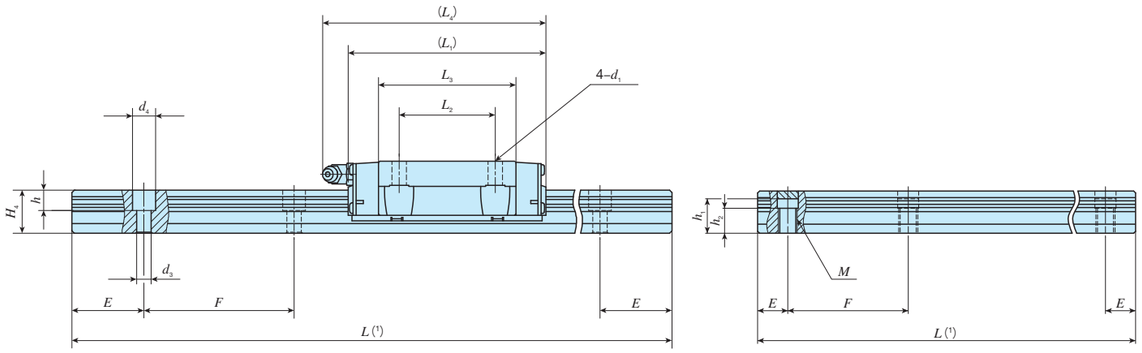

Ultra seal specification with track rail mounting from bottom

Identification number: MH series	Identification number: LWH series (No C-Lube)	Interchangeable	Mass (Ref.): Slide unit kg	Mass (Ref.): Track rail kg/m	Dimensions of assembly mm: H	H_1	N	Dimensions of slide unit mm: W_2	W_3	W_4	L_1	L_2	L_3	L_4	d_1	H_2	H_3
MH 15		○	0.22	1.47	24	4.5	16	47	38	4.5	66	30	44.2	69	4.5	7	4.5
	LWH 15···B	○											44.6				
–	LWH 15···SL	○															
–	LWH 15···M*	–															
–	LWH 15···MU*	–															
MH 20		○	0.48	2.56	30	5	21.5	63	53	5	83	40	56	94	6	10	5.5
	LWH 20···B	○											57.2				
–	LWH 20···SL	○															
–	LWH 20···M*	–															
–	LWH 20···MU*	–															
MHG 20		○	0.71								112		84.8	122			
	LWHG 20	○											86				
MH 25		○	0.70	3.50	36	6.5	23.5	70	57	6.5	95	45	63.9	105	7	10	6.5
	LWH 25···B	○											64.7				
–	LWH 25···SL	○															
MH 25···M*		–											63.9				
	LWH 25···M*	–											64.7				
MH 25···MU*		–											63.9				
	LWH 25···MU*	–											64.7				
MHG 25		○	0.93								118		86.6	128			
	LWHG 25	○											87.4				

Dimensions of track rail mm: W	H_4	d_3	d_4	h	M	h_1 (2)	h_2	E	F	Appended mounting bolt for track rail (3) mm: Bolt size× ℓ	Basic dynamic load rating (4): C N	Basic static load rating (4): C_0 N	Static moment rating (4): T_0 N·m	T_X N·m	T_Y N·m
15	15	4.5	8	6	–	–	–	30	60	M4×16	11 600	13 400	112	95.6 556	95.6 556
		–	–	–	M 6	12	9			–					
20	18	6	9.5	8.5	–	–	–	30	60	M5×18	18 100	21 100	232	195 1 090	195 1 090
		–	–	–	M 8	13.5	9.5			–					
		6	9.5	8.5	–	–	–			M5×18	24 100	31 700	349	421 2 140	421 2 140
23	22	7	11	9	–	–	–	30	60	M6×22	25 200	28 800	362	309 1 690	309 1 690
		–	–	–	M10	18	13			–					
		7	11	9	–	–	–			M6×22	30 800	38 300	483	533 2 740	533 2 740

Notes (1) Track rail lengths L are shown in Table 2.1 on page Ⅱ−93, Table 2.2 on page Ⅱ−94, and Tables 2.3 and 2.4 on page Ⅱ−95.
(2) Choose bolts whose dimension allow fixing thread depth into track rail to be less than h_1.
(3) The appended track rail mounting bolts are hexagon socket head bolts equivalent to JIS B 1176. For stainless steel model, stainless steel bolts are appended.
In an assembled set of MH series and LWH···MU model, track rail mounting bolts are not appended.
(4) The direction of basic dynamic load rating (C), basic static load rating (C_0), and static moment rating (T_0, T_X, T_Y) are shown in the sketches below. The upper values of T_X and T_Y are for one slide unit and the lower values are for two slide units in close contact.
(5) The shapes of grease nipple vary by size. The specifications are shown in Table 15 on page Ⅱ−104.
Remark: The identification numbers with * are our semi-standard items.

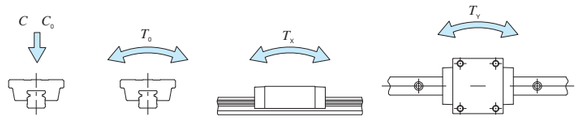

Example of identification number of assembled set

Model code	Dimensions	Part code			Model code	Dust protection code	Material code	Preload symbol	Classification symbol	Interchangeable code	Supplemental code
MH	G	20	C2	R480				T1	P		/V
①	②	③	④	⑤	①	⑥	⑦	⑧	⑨	⑩	⑪

① Model
MH	Flange type mounting from bottom
LWH(···B)	

② Length of slide unit
No symbol	Standard
G	Long

③ Size: 15, 20, 25

④ Number of slide unit (2)

⑤ Length of track rail (480 mm)

⑥ Dust protection code
No symbol	Standard specification
M	Ultra seal specification
MU	Ultra seal specification with track rail mounting from bottom

⑦ Material type
No symbol	High carbon steel made
SL	Stainless steel made

⑧ Preload amount
No symbol	Standard
T1	Light preload
T2	Medium preload
T3	Heavy preload

⑨ Accuracy class
H	High
P	Precision
SP	Super precision

⑩ Interchangeable
No symbol	Non-interchangeable specification
S1	S1 specification
S2	S2 specification

⑪ Special specification: A, BS, D, E, F, I , J, L, LF, MA MN, N, PS, Q, RE, T, UR, V, W, Y, Z

1N=0.102kgf=0.2248lbs.
1mm=0.03937inch

IKO C-Lube Linear Way MH

Flange type mounting from bottom

MH · LWH

Shape

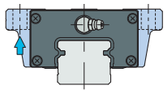

Size: 15, 20, 25, 30, 35, 45, 55, 65

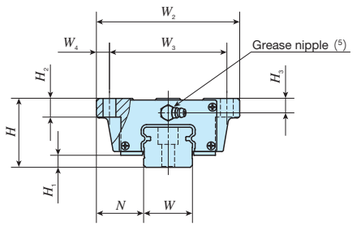

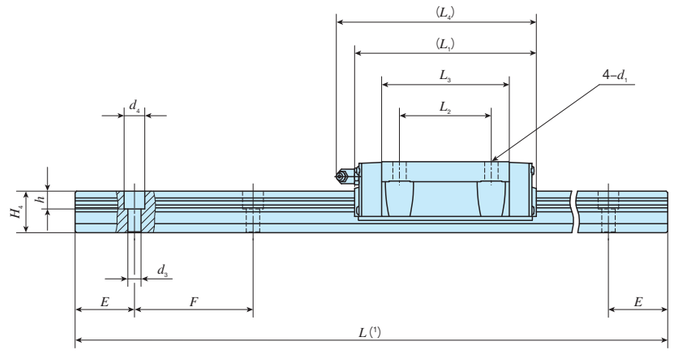

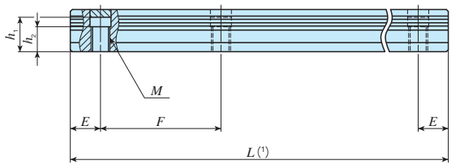

Ultra seal specification with track rail mounting from bottom

Identification number: MH series	Identification number: LWH series (No C-Lube)	Interchangeable	Mass (Ref.): Slide unit kg	Mass (Ref.): Track rail kg/m	Dimensions of assembly mm: H	H1	N	Dimensions of slide unit mm: W2	W3	W4	L1	L2	L3	L4	d1	H2	H3	Dimensions of track rail mm: W	H4	d3	d4	h	M	h1 (2)	h2	E	F	Appended mounting bolt for track rail (3) mm: Bolt size× ℓ	Basic dynamic load rating (4): C N	Basic static load rating (4): C0 N	Static moment rating (4): T0 N·m	Tx N·m	TY N·m
MH 30		○	1.28	4.82	42	9	31	90	72	9	113	52	80.6	123	9	10	8	28	25	9	14	12	–	–	–	40	80	M 8×28	35 400	40 700	623	536 2 820	536 2 820
	LWH 30···B	○				7																										
–	LWH 30···SL	○																														
MH 30···M*		–																														
	LWH 30···M*	–																														
MH 30···MU*		–																		9	14	12	–	–	–			M 8×28					
	LWH 30···MU*	–																		–	–	–	M12	20	13			–					
MHG 30		○	1.69			9					139		106.6	149						9	14	12	–	–	–			M 8×28	42 700	53 200	814	894 4 460	894 4 460
	LWHG 30	○				7																										
MH 35		○	1.79	6.85	48	10	33	100	82	9	123	62	86.2	135	9	13	10	34	28	9	14	12	–	–	–	40	80	M 8×28	48 700	53 700	823	631 3 480	579 3 190
	LWH 35···B	○				8																										
–	LWH 35···M*	–																														
–	LWH 35···MU*	–																		–	–	–	M12	23	16			–					
MHG 35		○	2.35			10					151		114	163						9	14	12	–	–	–			M 8×28	59 500	71 600	1 100	1 090 5 570	1 000 5 110
	LWHG 35	○				8																										
MH 45		○	3.17	10.7	60	13	37.5	120	100	10	147	80	103.4	158	11	15	13	45	34	14	20	17	–	–	–	52.5	105	M12×35	74 600	80 200	1 610	1 150 6 190	1 060 5 690
	LWH 45···B	○				10																										
–	LWH 45···M*	–																														
–	LWH 45···MU*	–																		–	–	–	M16	29	17			–					
MHG 45		○	4.34			13					190		146.6	201						14	20	17	–	–	–			M12×35	95 200	114 000	2 280	2 240 11 100	2 050 10 200
	LWHG 45	○				10																										

Notes (1) Track rail lengths L are shown in Table 2.1 on page Ⅱ−93, Table 2.2 on page Ⅱ−94, and Tables 2.3 and 2.4 on page Ⅱ−95.
(2) Choose bolts whose dimension allow fixing thread depth into track rail to be less than h_1.
(3) The appended track rail mounting bolts are hexagon socket head bolts equivalent to JIS B 1176. For stainless steel model, stainless steel bolts are appended.
In an assembled set of MH series and LWH···MU model, track rail mounting bolts are not appended.
(4) The direction of basic dynamic load rating (C), basic static load rating (C_0), and static moment rating (T_0, T_X, T_Y) are shown in the sketches below. The upper values of T_X and T_Y are for one slide unit and the lower values are for two slide units in close contact.
(5) The shapes of grease nipple vary by size. The specifications are shown in Table 15 on page Ⅱ−104.

Remark: The identification numbers with * are our semi-standard items.

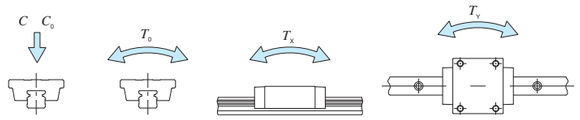

Example of identification number of assembled set

Model code		Dimensions	Part code		Model code	Dust protection code	Material code	Preload symbol	Classification symbol	Interchangeable code	Supplemental code
MH	G	35	C2	R800				T1	P		/V
①	②	③	④	⑤	①	⑥	⑦	⑧	⑨	⑩	⑪

① Model

MH	Flange type mounting from bottom
LWH(···B)	

② Length of slide unit

No symbol	Standard
G	Long

③ Size: 30, 35, 45

④ Number of slide unit (2)

⑤ Length of track rail (800 mm)

⑥ Dust protection code

No symbol	Standard specification
M	Ultra seal specification
MU	Ultra seal specification with track rail mounting from bottom

⑦ Material type

No symbol	High carbon steel made
SL	Stainless steel made

⑧ Preload amount

No symbol	Standard
T1	Light preload
T2	Medium preload
T3	Heavy preload

⑨ Accuracy class

H	High
P	Precision
SP	Super precision

⑩ Interchangeable

No symbol	Non-interchangeable specification
S1	S1 specification
S2	S2 specification

⑪ Special specification: A, BS, D, E, F, I , J, L, LF, MA MN, N, PS, Q, RE, T, UR, V, W, Y, Z

1N=0.102kgf=0.2248lbs.
1mm=0.03937inch

Flange type mounting from bottom

Shape	LWH			
	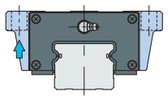			
Size	15	20	25	30
	35	45	55	65

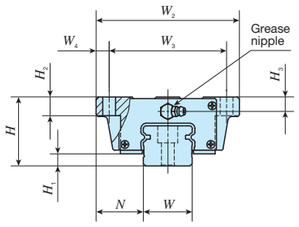

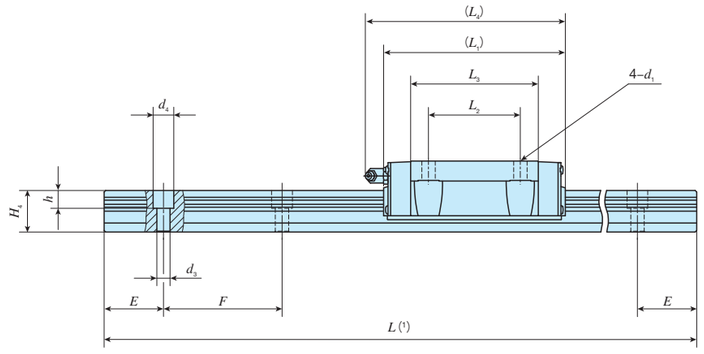

Identification number		Interchangeable	Mass (Ref.)		Dimensions of assembly mm			Dimensions of slide unit mm										Dimensions of track rail mm							Appended mounting bolt for track rail (2) mm	Basic dynamic load rating (3)	Basic static load rating (3)	Static moment rating (3)		
MH series	LWH series (No C-Lube)		Slide unit kg	Track rail kg/m	H	H_1	N	W_2	W_3	W_4	L_1	L_2	L_3	L_4	d_1	H_2		H_3	H_5	W	H_4	d_3	d_4	h	E	F	Bolt size× ℓ	C N	C_0 N	T_0 N · m	T_X N · m	T_Y N · m
–	LWH 55···B	○	5.30	15.5	70	13	43.5	140	116	12	183	95	132	194	14	17		14	–	53	41	16	23	20	60	120	M14×45	113 000	121 000	2 870	2 210 11 600	2 030 10 600
–	LWHG 55	○	7.40								235		183.6	246													142 000	168 000	3 970	4 120 20 200	3 780 18 500
–	LWH 65···B	○	12.3	22.2	90	14	53.5	170	142	14	229	110	164	239	16	23		20	–	63	48	18	26	22	75	150	M16×50	176 000	184 000	5 180	4 130 22 000	3 790 20 200
–	LWHG 65	○	17.6								303		238.8	313													229 000	269 000	7 560	8 530 41 500	7 810 38 100

Notes (1) Track rail lengths L are shown in Table 2.1 on page Ⅱ−93.
(2) The appended track rail mounting bolts are hexagon socket head bolts equivalent to JIS B 1176.
(3) The direction of basic dynamic load rating (C), basic static load rating (C_0), and static moment rating (T_0, T_X, T_Y) are shown in the sketches below. The upper values of T_X and T_Y are for one slide unit and the lower values are for two slide units in close contact.
Remark: The specifications of grease nipple are shown in Table 15 on page Ⅱ−104.

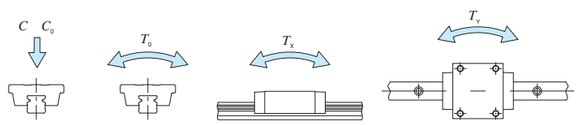

Example of identification number of assembled set

Model code		Dimensions	Part code		Model code	Preload symbol	Classification symbol	Interchangeable code	Supplemental code
LWH	G	55	C2	R1200		T1	P		/V
①	②	③	④	⑤	①	⑥	⑦	⑧	⑨

① Model

LWH(···B)	Flange type mounting from bottom

② Length of slide unit

No symbol	Standard
G	Long

③ Size

55, 65

④ Number of slide unit (2)

⑤ Length of track rail (1,200 mm)

⑥ Preload amount

No symbol	Standard
T1	Light preload
T2	Medium preload
T3	Heavy preload

⑦ Accuracy class

H	High
P	Precision
SP	Super precision

⑧ Interchangeable

No symbol	Non-interchangeable specification
S1	S1 specification
S2	S2 specification

⑨ Special specification

A, D, E, F, Ⅰ, J, L, LF, MN
N, PS, Q, T, V, W, Y, Z

1N=0.102kgf=0.2248lbs.
1mm=0.03937inch

IKO C-Lube Linear Way MH

Flange type mounting from top

Shape: **MHT · LWHT**

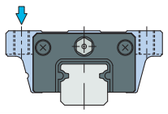

Size: 8 | 10 | 12 | 15 | 20 | 25 | 30 | 35 | 45 | 55 | 65

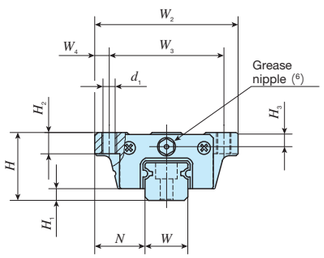

MHT 8 ···SL, LWHT 8 ···SL
MHT 10 ···SL, LWHT 10 ···SL
MHT 12 (···SL) , LWHT 12 (···SL)
MHTG 15

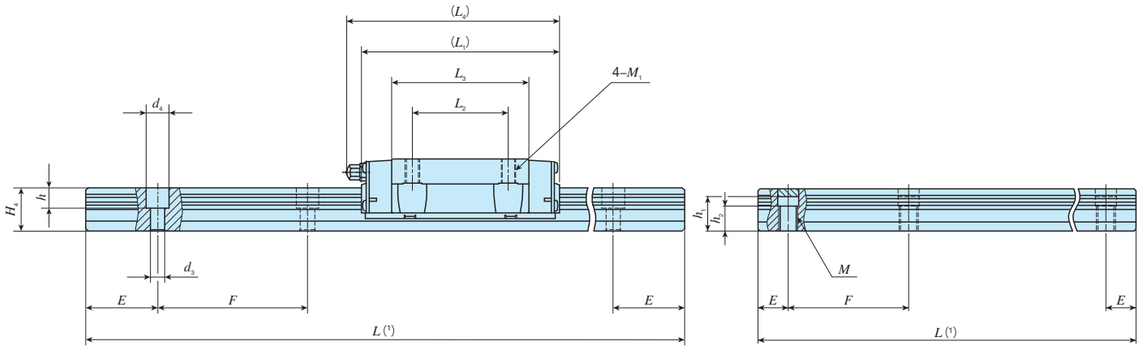

Ultra seal specification with track rail mounting from bottom

Identification number		Interchangeable	Mass (Ref.)		Dimensions of assembly mm			Dimensions of slide unit mm											Dimensions of track rail mm										Appended mounting bolt for track rail (4) mm	Basic dynamic load rating (5)	Basic static load rating (5)	Static moment rating (5)		
MH series	LWH series (No C-Lube)		Slide unit kg	Track rail kg/m	H	H_1	N	W_2	W_3	W_4	L_1	L_2	L_3	L_4	d_1 (2)	M_1	H_2	H_3		W	H_4	d_3	d_4	h	M	h_1 (3)	h_2	E	F	Bolt size× ℓ	C N	C_0 N	T_0 N·m	T_X N·m	T_Y N·m
MHT 8···SL	LWHT 8···SL	○	0.015	0.32	10	2.1	8	24	19	2.5	24	10	15.3	–	1.9	M2.3	3.5	2		8	6	2.4	4.2	2.3	–	–	–	10	20	M2× 8	1 510	2 120	8.8	5.5 32.0	4.7 26.9
MHT 10···SL		○	0.031	0.47	12	2.4	10	30	24	3	32	12	21.4	–	2.6	M3	4.5	2.5		10	7	3.5	6	3.5	–	–	–	12.5	25	M3× 8	2 640	3 700	19.2	13.3 73.8	11.1 61.9
	LWHT 10···SL	○	0.032																														
MHT 12		○	0.108	0.86	19	3.2	14	40	32	4	46	15	31.6	50	3.4	M4	6	4		12	10.5	3.5	6	4.5	–	–	–	20	40	M3×12	6 260	8 330	51.6	44.7 237	37.5 199
	LWHT 12	○	0.11																														
MHT 12···SL		○	0.108																														
	LWHT 12···SL	○	0.11																														
MHT 15		○	0.22	1.47	24	4.5	16	47	38	4.5	66	30	44.2	69	–	M5	7	4.5		15	15	4.5	8	6	–	–	–	30	60	M4×16	11 600	13 400	112	95.6 556	95.6 556
	LWHT 15···B	○											44.6																				
MHT 15···SL		○											44.2																				
	LWHT 15···SL	○											44.6																				
–	LWHT 15···M*	–																				–	–	–	M6	12	9		–				
–	LWHT 15···MU*	–																															
MHTG 15	–	○	0.29								82		60.1	85	4.4							4.5	8	6	–	–	–		M4×16	14 400	18 300	153	172 918	172 918

Notes (1) Track rail lengths L are shown in Table 2.1 on page Ⅱ−93, Table 2.2 on page Ⅱ−94, and Tables 2.3 and 2.4 on page Ⅱ−95.
(2) Series of size 8 to 12 and MHTG15 can also be mounted in upward direction.
(3) Choose bolts whose dimension allow fixing thread depth into track rail to be less than h_1.
(4) The appended track rail mounting bolts are hexagon socket head bolts equivalent to JIS B 1176. For stainless steel model, stainless steel bolts are appended.
In an assembled set of MH series and LWHT···MU model, track rail mounting bolts are not appended.
(5) The direction of basic dynamic load rating (C), basic static load rating (C_0), and static moment rating (T_0, T_X, T_Y) are shown in the sketches below. The upper values of T_X and T_Y are for one slide unit and the lower values are for two slide units in close contact.
(6) Series of size 8 and 10 are provided with an oil hole. The specifications of oil holes are shown in Table 14 on page Ⅱ−104.
The shapes of grease nipples of size 12 and 15 vary by size. The specifications are shown in Table 15 on page Ⅱ−104.
Remark: The identification numbers with * are our semi-standard items.

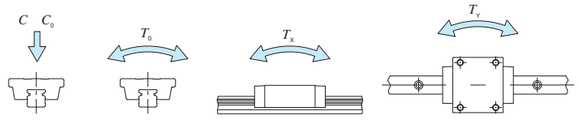

Example of identification number of assembled set

Model code	Dimensions	Part code	Model code	Dust protection code	Material code	Preload symbol	Classification symbol	Interchangeable code	Supplemental code
MHT	G	15	C2	R900				T1	P		/V
①	②	③	④	⑤	①	⑥	⑦	⑧	⑨	⑩	⑪

① Model

MHT	Flange type mounting from top
LWHT(···B)	

② Length of slide unit

No symbol	Standard
G	Long

③ Size: 8, 10, 12, 15

④ Number of slide unit (2)

⑤ Length of track rail (900 mm)

⑥ Dust protection code

No symbol	Standard specification
M	Ultra seal specification
MU	Ultra seal specification with track rail mounting from bottom

⑦ Material type

No symbol	High carbon steel made
SL	Stainless steel made

⑧ Preload amount

T0	Clearance
No symbol	Standard
T1	Light preload
T2	Medium preload
T3	Heavy preload

⑨ Accuracy class

H	High
P	Precision
SP	Super precision

⑩ Interchangeable

No symbol	Non-interchangeable specification
S1	S1 specification
S2	S2 specification

⑪ Special specification: A, BS, D, E, F, I , J, L, LF, MA MN, N, Q, RE, T, U, V, W, Y, Z

1N=0.102kgf=0.2248lbs.
1mm=0.03937inch

IKO C-Lube Linear Way MH

Flange type mounting from top

Shape	MHT · LWHT 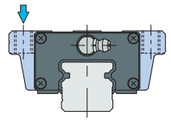
Size	8 10 12 15 20 25 30 35 45 55 65

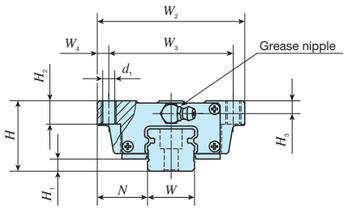

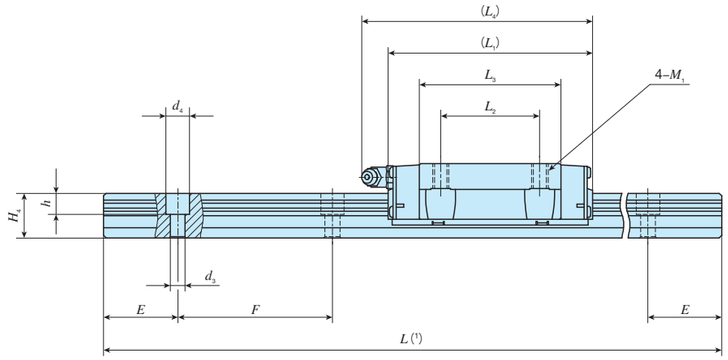

Ultra seal specification with track rail mounting from bottom

Identification number: MH series	Identification number: LWH series (No C-Lube)	Interchangeable	Mass (Ref.): Slide unit kg	Mass (Ref.): Track rail kg/m	Dimensions of assembly mm: H	H_1	N	Dimensions of slide unit mm: W_2	W_3	W_4	L_1	L_2	L_3	L_4	d_1	M_1	H_2	H_3	W	H_4	Dimensions of track rail mm: d_3	d_4	h	M	h_1 (2)	h_2	E	F	Appended mounting bolt for track rail (3) mm: Bolt size× ℓ	Basic dynamic load rating (4) C N	Basic static load rating (4) C_0 N	Static moment rating (4): T_0 N·m	T_X N·m	T_Y N·m
MHT 20		○	0.48	2.56	30	5	21.5	63	53	5	83	40	56	94	–	M6	10	5.5	20	18	6	9.5	8.5	–	–	–	30	60	M5×18	18 100	21 100	232	195 1 090	195 1 090
	LWHT 20···B	○											57.2																				
MHT 20···SL		○											56																				
	LWHT 20···SL	○											57.2																				
–	LWHT 20···M*	–																											–				
–	LWHT 20···MU*	–																			–	–	–	M 8	13.5	9.5			–				
MHTG 20		○	0.71								112		84.8	122							6	9.5	8.5	–	–	–			M5×18	24 100	31 700	349	421 2 140	421 2 140
	LWHTG 20	○											86																				
MHT 25		○	0.70	3.50	36	6.5	23.5	70	57	6.5	95	45	63.9	105	–	M8	10	6.5	23	22	7	11	9	–	–	–	30	60	M6×22	25 200	28 800	362	309 1 690	309 1 690
	LWHT 25···B	○											64.7																				
MHT 25···SL		○											63.9																				
	LWHT 25···SL	○											64.7																				
MHT 25···M*		–											63.9																				
	LWHT 25···M*	–											64.7																				
MHT 25···MU*		–											63.9								–	–	–	M10	18	13			–				
	LWHT 25···MU*	–											64.7																				
MHTG 25		○	0.93								118		86.6	128							7	11	9	–	–	–			M6×22	30 800	38 300	483	533 2 740	533 2 740
	LWHTG 25	○											87.4																				

Notes (1) Track rail lengths L are shown in Table 2.1 on page Ⅱ−93, Table 2.2 on page Ⅱ−94, and Tables 2.3 and 2.4 on page Ⅱ−95.
(2) Choose bolts whose dimension allow fixing thread depth into track rail to be less than h_1.
(3) The appended track rail mounting bolts are hexagon socket head bolts equivalent to JIS B 1176. For stainless steel model, stainless steel bolts are appended.
In an assembled set of MH series and LWHT···MU model, track rail mounting bolts are not appended.
(4) The direction of basic dynamic load rating (C), basic static load rating (C_0), and static moment rating (T_0, T_X, T_Y) are shown in the sketches below. The upper values of T_X and T_Y are for one slide unit and the lower values are for two slide units in close contact.

Remarks 1. The specifications of grease nipple are shown in Table 15 on page Ⅱ−104.
2. The identification numbers with * are our semi-standard items.

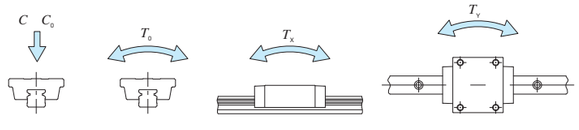

Example of identification number of assembled set

Model code	Dimensions	Part code			Model code	Dust protection code	Material code	Preload symbol	Classification symbol	Interchangeable code	Supplemental code
MHT	G	25	C2	R840				T_1	P		/V
①	②	③	④	⑤	①	⑥	⑦	⑧	⑨	⑩	⑪

① Model
MHT LWHT(···B)	Flange type mounting from top

② Length of slide unit
No symbol	Standard
G	Long

③ Size: 20, 25

④ Number of slide unit (2)

⑤ Length of track rail (840 mm)

⑥ Dust protection code
No symbol	Standard specification
M	Ultra seal specification
MU	Ultra seal specification with track rail mounting from bottom

⑦ Material type
No symbol	High carbon steel made
SL	Stainless steel made

⑧ Preload amount
No symbol	Standard
T_1	Light preload
T_2	Medium preload
T_3	Heavy preload

⑨ Accuracy class
H	High
P	Precision
SP	Super precision

⑩ Interchangeable
No symbol	Non-interchangeable specification
S1	S1 specification
S2	S2 specification

⑪ Special specification: A, BS, D, E, F, I, J, L, LF, MA MN, N, PS, Q, RE, T, UR, V, W, Y, Z

1N=0.102kgf=0.2248lbs.
1mm=0.03937inch

IKO C-Lube Linear Way MH

Flange type mounting from top

Shape	MHT · LWHT
Size	8 · 10 · 12 · 15 · 20 · 25 · 30 · 35 · 45 · 55 · 65

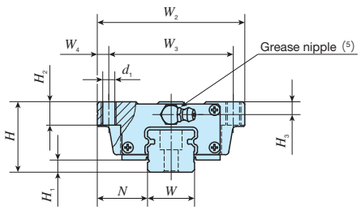

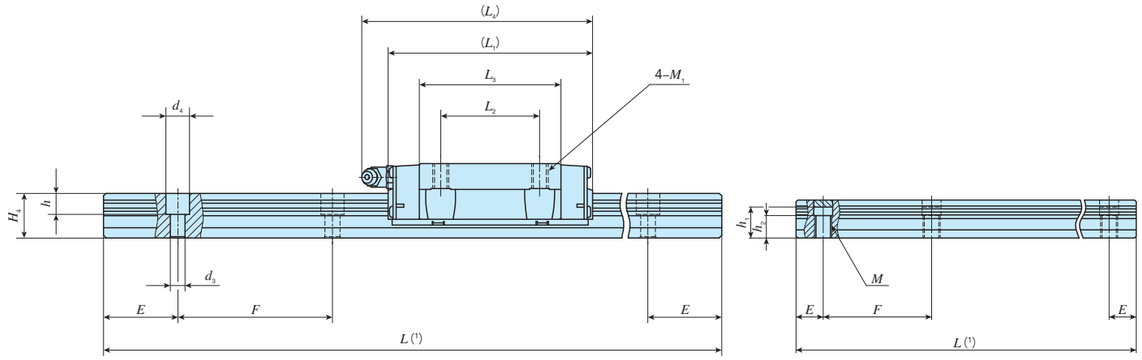

Ultra seal specification with track rail mounting from bottom

Identification number: MH series	Identification number: LWH series (No C-Lube)	Interchangeable	Mass (Ref.): Slide unit kg	Mass (Ref.): Track rail kg/m	Dimensions of assembly mm: H	H1	N	Dimensions of slide unit mm: W2	W3	W4	L1	L2	L3	L4	d1	M1	H2	H3	W	H4	Dimensions of track rail mm: d3	d4	h	M	h1 (2)	h2	E	F	Appended mounting bolt for track rail (3) mm: Bolt size × ℓ	Basic dynamic load rating (4) C N	Basic static load rating (4) C0 N	Static moment rating (4) T0 N·m	Tx N·m	Ty N·m
MHT 30		○	1.28	4.82	42	9	31	90	72	9	113	52	80.6	123	–	M10	10	8	28	25	9	14	12	–	–	–	40	80	M 8×28	35 400	40 700	623	536 2 820	536 2 820
	LWHT 30···B	○				7																										
MHT 30···SL		○				9																										
	LWHT 30···SL	○				7																										
MHT 30···M*		–																														
	LWHT 30···M*	–																														
MHT 30···MU*		–																			–	–	–	M12	20	13			–			
	LWHT 30···MU*	–																														
MHTG 30		○	1.69			9					139		106.6	149							9	14	12	–	–	–			M 8×28	42 700	53 200	814	894 4 460	894 4 460
	LWHTG30	○				7																										
MHT 35		○	1.79	6.85	48	10	33	100	82	9	123	62	86.2	135	–	M10	13	10	34	28	9	14	12	–	–	–	40	80	M 8×28	48 700	53 700	823	631 3 480	579 3 190
	LWHT 35···B	○				8																										
–	LWHT 35···M*	–																														
–	LWHT 35···MU*	–																			–	–	–	M12	23	16			–			
MHTG 35		○	2.35			10					151		114	163							9	14	12	–	–	–			M 8×28	59 500	71 600	1 100	1 090 5 570	1 000 5 110
	LWHTG35	○				8																										

Notes (1) Track rail lengths L are shown in Table 2.1 on page Ⅱ−93, Table 2.2 on page Ⅱ−94, and Tables 2.3 and 2.4 on page Ⅱ−95.
(2) Choose bolts whose dimension allow fixing thread depth into track rail to be less than h_1.
(3) The appended track rail mounting bolts are hexagon socket head bolts equivalent to JIS B 1176. For stainless steel model, stainless steel bolts are appended.
In an assembled set of MH series and LWHT···MU model, track rail mounting bolts are not appended.
(4) The direction of basic dynamic load rating (C), basic static load rating (C_0), and static moment rating (T_0, T_x, T_y) are shown in the sketches below. The upper values of T_x and T_y are for one slide unit and the lower values are for two slide units in close contact.
(5) The shapes of grease nipple vary by size. The specifications are shown in Table 15 on page Ⅱ−104.
Remark: The identification numbers with * are our semi-standard items.

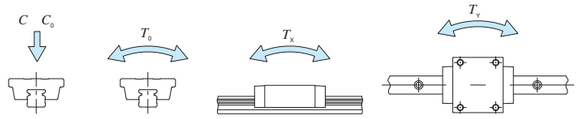

Example of identification number of assembled set

Model code	Dimensions	Part code	Model code	Dust protection code	Material code	Preload symbol	Classification symbol	Interchangeable code	Supplemental code
MHT	G	35	C2	R1040			T1	P		/V
①	②	③	④	⑤	①	⑥	⑦	⑧	⑨	⑩	⑪

① Model

MHT	Flange type mounting from top
LWHT (···B)	

② Length of slide unit

No symbol	Standard
G	Long

③ Size: 30, 35

④ Number of slide unit (2)

⑤ Length of track rail (1,040 mm)

⑥ Dust protection code

No symbol	Standard specification
M	Ultra seal specification
MU	Ultra seal specification with track rail mounting from bottom

⑦ Material type

No symbol	High carbon steel made
SL	Stainless steel made

⑧ Preload amount

No symbol	Standard
T1	Light preload
T2	Medium preload
T3	Heavy preload

⑨ Accuracy class

H	High
P	Precision
SP	Super precision

⑩ Interchangeable

No symbol	Non-interchangeable specification
S1	S1 specification
S2	S2 specification

⑪ Special specification: A, BS, D, E, F, I, J, L, LF, MA MN, N, PS, Q, RE, T, UR, V, W, Y, Z

1N=0.102kgf=0.2248lbs.
1mm=0.03937inch

IKO C-Lube Linear Way MH

Flange type mounting from top

Shape: **MHT · LWHT**

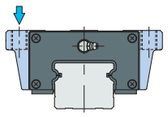

Size						
8	10	12	15	20	25
30	35	45	55	65	

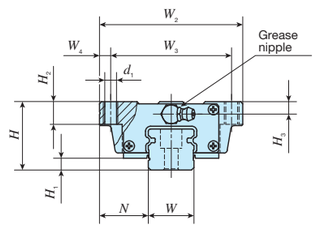

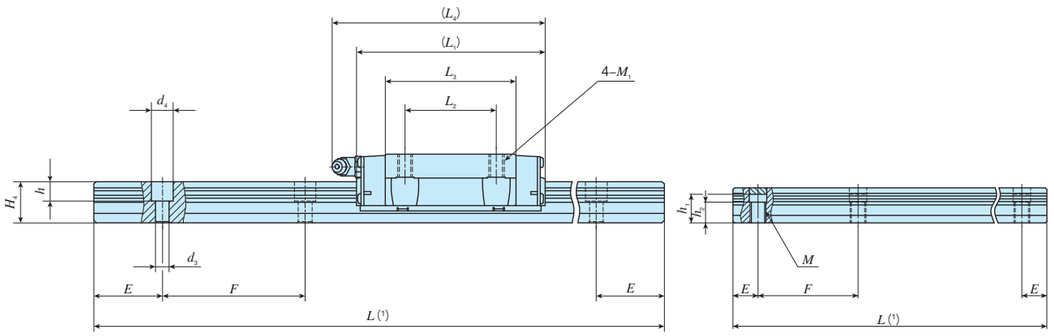

Ultra seal specification with track rail mounting from bottom

Identification number		Interchangeable	Mass (Ref.)		Dimensions of assembly mm			Dimensions of slide unit mm												Dimensions of track rail mm										Appended mounting bolt for track rail (3) mm	Basic dynamic load rating (4)	Basic static load rating (4)	Static moment rating (4)		
MH series	LWH series (No C-Lube)		Slide unit kg	Track rail kg/m	H	H_1	N	W_2	W_3	W_4	L_1	L_2	L_3	L_4	d_1	M_1	H_2		H_3	H_5	W	H_4	d_3	d_4	h	M	h_1 (2)	h_2	E	F	Bolt size × ℓ	C N	C_0 N	T_0 N·m	T_X N·m	T_Y N·m
MHT 45		○	3.17	10.7	60	13	37.5	120	100	10	147	80	103.4	158	–	M12	15		13	–	45	34	14	20	17	–	–	–	52.5	105	M12×35	74 600	80 200	1 610	1 150 6 190	1 060 5 690
	LWHT 45···B	○				10																												
–	LWHT 45···M*	–																																
–	LWHT 45···MU*	–																					–	–	–	M16	29	17			–			
MHTG 45		○	4.34			13					190		146.6	201									14	20	17	–	–	–			M12×35	95 200	114 000	2 280	2 240 11 100	2 050 10 200
	LWHTG 45	○				10																												
–	LWHT 55···B	○	5.30	15.5	70	13	43.5	140	116	12	183	95	132	194	–	M14	17		14	–	53	41	16	23	20	–	–	–	60	120	M14×45	113 000	121 000	2 870	2 210 11 600	2 030 10 600
–	LWHTG 55	○	7.40								235		183.6	246																		142 000	168 000	3 970	4 120 20 200	3 780 18 500
–	LWHT 65···B	○	12.3	22.2	90	14	53.5	170	142	14	229	110	164	239	–	M16	23		20	–	63	48	18	26	22	–	–	–	75	150	M16×50	176 000	184 000	5 180	4 130 22 000	3 790 20 200
–	LWHTG 65	○	17.6								303		238.8	313																		229 000	269 000	7 560	8 530 41 500	7 810 38 100

Notes (1) Track rail lengths L are shown in Table 2.1 on page Ⅱ−93 and Tables 2.3 and 2.4 on page Ⅱ−95.
(2) Choose bolts whose dimension allow fixing thread depth into track rail to be less than h_1.
(3) The appended track rail mounting bolts are hexagon socket head bolts equivalent to JIS B 1176.
In an assembled set of MH series and LWHT···MU model, track rail mounting bolts are not appended.
(4) The direction of basic dynamic load rating (C), basic static load rating (C_0), and static moment rating (T_0, T_X, T_Y) are shown in the sketches below. The upper values of T_X and T_Y are for one slide unit and the lower values are for two slide units in close contact.

Remarks 1. The specifications of grease nipple are shown in Table 15 on page Ⅱ−104.
2. The identification numbers with * are our semi-standard items.

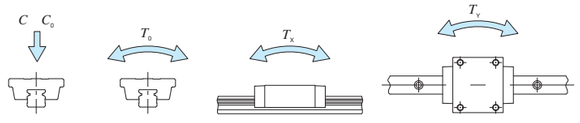

Example of identification number of assembled set

Model code	Dimensions	Part code		Model code	Dust protection code	Preload symbol	Classification symbol	Interchangeable code	Supplemental code
MHT	G	45	C2	R1260		T1	P		/V
①	②	③	④	⑤	①	⑥	⑦	⑧	⑨	⑩

① Model

MHT LWHT(···B)	Flange type mounting from top

② Length of slide unit

No symbol	Standard
G	Long

③ Size: 45, 55, 65

④ Number of slide unit (2)

⑤ Length of track rail (1,260 mm)

⑥ Dust protection code

No symbol	Standard specification
M	Ultra seal specification
MU	Ultra seal specification with track rail mounting from bottom

⑦ Preload amount

No symbol	Standard
T1	Light preload
T2	Medium preload
T3	Heavy preload

⑧ Accuracy class

H	High
P	Precision
SP	Super precision

⑨ Interchangeable

No symbol	Non-interchangeable specification
S1	S1 specification
S2	S2 specification

⑩ Special specification: A, BS, D, E, F, I, J, L, LF, MA MN, N, PS, Q, RE, T, V, W, Y, Z

1N=0.102kgf=0.2248lbs.
1mm=0.03937inch

Block type mounting from top

Shape	MHD · LWHD
Size	8 · 10 · 12 · 15 · 25 / 30 · 35 · 45 · 55 · 65

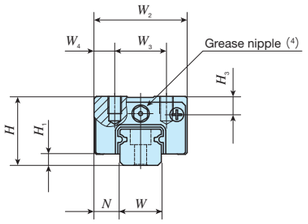

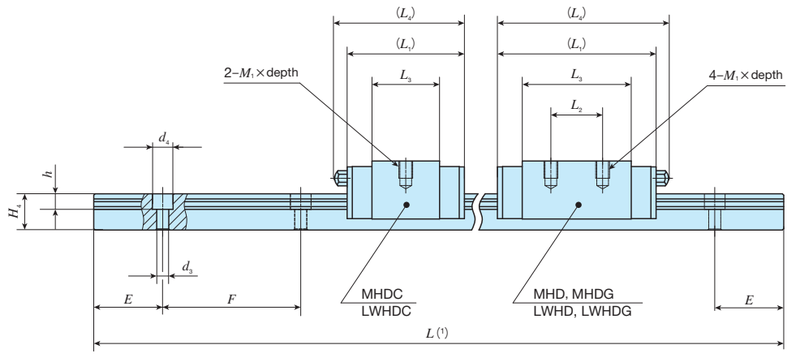

Identification number: MH series	Identification number: LWH series (No C-Lube)	Interchangeable	Mass (Ref.): Slide unit kg	Mass (Ref.): Track rail kg/m	Dimensions of assembly mm: H	H_1	N	Dimensions of slide unit mm: W_2	W_3	W_4	L_1	L_2	L_3	L_4	M_1×depth	H_3	Dimensions of track rail mm: W	H_4	d_3	d_4	h	E	F	Appended mounting bolt for track rail (2) mm: Bolt size× ℓ	Basic dynamic load rating (3): C N	Basic static load rating (3): C_0 N	Static moment rating (3): T_0 N·m	T_X N·m	T_Y N·m
MHDC 8···SL	LWHDC 8···SL	○	0.008	0.32	11	2.1	4	16	10	3	18	–	9.0	–	M2 ×2.5	3	8	6	2.4	4.2	2.3	10	20	M2× 8	1 050	1 270	5.3	2.2 15.5	1.8 13.0
MHD 8···SL	LWHD 8···SL	○	0.013								24	10	15.3												1 510	2 120	8.8	5.5 32.0	4.7 26.9
MHDG 8···SL	LWHDG 8···SL	○	0.018								30.5		21.7												1 910	2 970	12.3	10.4 55.4	8.8 46.4
MHDC 10···SL	LWHDC 10···SL	○	0.018	0.47	13	2.4	5	20	13	3.5	24	–	13.4	–	M2.6×3	3.5	10	7	3.5	6	3.5	12.5	25	M3× 8	1 920	2 350	12.2	5.8 37.1	4.8 31.2
MHD 10···SL		○	0.026								32	12	21.4												2 640	3 700	19.2	13.3 73.8	11.1 61.9
	LWHD 10···SL	○	0.027																										
MHDG 10···SL		○	0.035								40		29.4												3 280	5 050	26.2	23.8 123	20.0 103
	LWHDG 10···SL	○	0.036																										
MHDC 12···SL		○	0.057	0.86	20	3.2	7.5	27	15	6	34	–	19.6	38	M4 ×5	5	12	10.5	3.5	6	4.5	20	40	M3×12	4 560	5 300	32.8	19.4 117	16.3 98.5
	LWHDC 12···SL	○	0.058																										
MHD 12		○	0.089								46	15	31.6	50											6 260	8 330	51.6	44.7 237	37.5 199
	LWHD 12	○	0.091																										
MHD 12···SL		○	0.089																										
	LWHD 12···SL	○	0.091																										
MHDG 12···SL		○	0.115								58		43.6	62											7 780	11 400	70.4	80.4 399	67.5 335
	LWHDG 12···SL	○	0.118																										

Notes (1) Track rail lengths L are shown in Table 2.1 on page Ⅱ−93 and Table 2.2 on page Ⅱ−94.
(2) The appended track rail mounting bolts are hexagon socket head bolts equivalent to JIS B 1176. For stainless steel model, stainless steel bolts are appended.
In an assembled set of MH series, track rail mounting bolts are not appended.
(3) The direction of basic dynamic load rating (C), basic static load rating (C_0), and static moment rating (T_0, T_X, T_Y) are shown in the sketches below. The upper values of T_X and T_Y are for one slide unit and the lower values are for two slide units in close contact.
(4) Series of size 8 and 10 are provided with an oil hole. The specifications of oil holes are shown in Table 14 on page Ⅱ−104.
The specification of grease nipple for size 12 is shown in Table 15 on page Ⅱ−104.

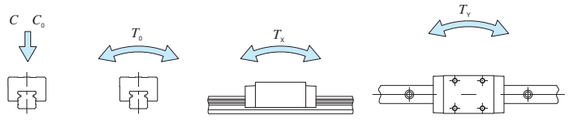

Example of identification number of assembled set

Model code	Dimensions	Part code		Material code	Preload symbol	Classification symbol	Interchangeable code	Supplemental code
MHD	G	12	C2	R320	SL	T1	P		/V
①	②	③	④	⑤	⑥	⑦	⑧	⑨	⑩

① Model

MHD LWHD	Block type mounting from top

② Length of slide unit

C	Short
No symbol	Standard
G	Long

③ Size: 8, 10, 12

④ Number of slide unit (2)

⑤ Length of track rail (320 mm)

⑥ Material type

No symbol	High carbon steel made
SL	Stainless steel made

⑦ Preload amount

T0	Clearance
No symbol	Standard
T1	Light preload

⑧ Accuracy class

H	High
P	Precision

⑨ Interchangeable

No symbol	Non-interchangeable specification
S1	S1 specification
S2	S2 specification

⑩ Special specification: A, D, E, F, Ⅰ, LR, MA MN, N, Q, U, W, Y

1N=0.102kgf=0.2248lbs.
1mm=0.03937inch

IKO C-Lube Linear Way MH

Block type mounting from top

Shape: **MHD · LWHD**

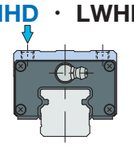

Size					
8	10	12	15	25	
30	35	45	55	65	

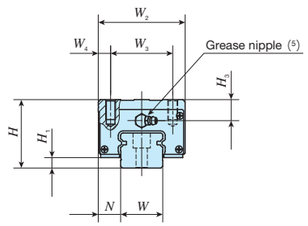

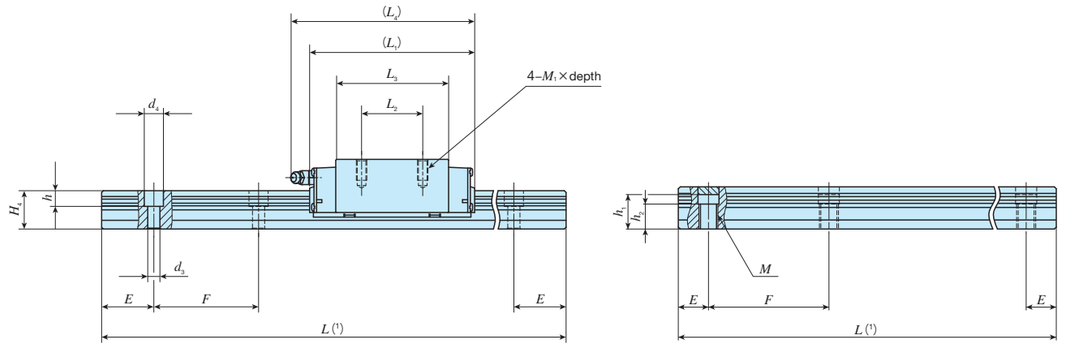

Ultra seal specification with track rail mounting from bottom

Identification number: MH series	Identification number: LWH series (No C-Lube)	Interchangeable	Mass (Ref.): Slide unit kg	Mass (Ref.): Track rail kg/m	Dimensions of assembly mm: H	H_1	N	Dimensions of slide unit mm: W_2	W_3	W_4	L_1	L_2	L_3	L_4	M_1×depth	H_3	Dimensions of track rail mm: W	H_4	d_3	d_4	h	M	h_1 (2)	h_2	E	F	Appended mounting bolt for track rail (3) mm: Bolt size× ℓ	Basic dynamic load rating (4): C N	Basic static load rating (4): C_0 N	Static moment rating (4): T_0 N·m	T_X N·m	T_Y N·m
MHD 15		○	0.23	1.47	28	4.5	9.5	34	26	4	66	26	44.2	69	M4×10	8.5	15	15	4.5	8	6	–	–	–	30	60	M4×16	11 600	13 400	112	95.6 / 556	95.6 / 556
	LWHD 15···B	○											44.6																		
–	LWHD 15···M*	–																													
–	LWHD 15···MU*	–																	–	–	–	M 6	12	9			–				
MHD 25		○	0.65	3.50	40	6.5	12.5	48	35	6.5	95	35	63.9	105	M6×12	10.5	23	22	7	11	9	–	–	–	30	60	M6×22	25 200	28 800	362	309 / 1 690	309 / 1 690
	LWHD 25···B	○											64.7																		
MHD 25···M*		–											63.9																		
	LWHD 25···M*	–											64.7																		
MHD 25···MU*		–											63.9						–	–	–	M10	18	13			–				
	LWHD 25···MU*	–											64.7																		
MHDG 25		○	0.80								118	50	86.6	128					7	11	9	–	–	–			M6×22	30 800	38 300	483	533 / 2 740	533 / 2 740
	LWHDG 25	○											87.4																		
MHD 30		○	1.12	4.82	45	9 / 7	16	60	40	10	113	40	80.6	123	M8×16	11	28	25	9	14	12	–	–	–	40	80	M8×28	35 400	40 700	623	536 / 2 820	536 / 2 820
	LWHD 30···B	○																													
MHD 30···M*		–																													
	LWHD 30···M*	–																													
MHD 30···MU*		–																	–	–	–	M12	20	13			–				
	LWHD 30···MU*	–																													
MHDG 30		○	1.44			9 / 7					139	60	106.6	149					9	14	12	–	–	–			M8×28	42 700	53 200	814	894 / 4 460	894 / 4 460
	LWHDG 30	○																													

Notes (1) Track rail lengths L are shown in Table 2.1 on page Ⅱ−93 and Tables 2.3 and 2.4 on page Ⅱ−95.
(2) Choose bolts whose dimension allow fixing thread depth into track rail to be less than h_1.
(3) The appended track rail mounting bolts are hexagon socket head bolts equivalent to JIS B 1176.
In an assembled set of MH series and LWHD···MU model, track rail mounting bolts are not appended.
(4) The direction of basic dynamic load rating (C), basic static load rating (C_0), and static moment rating (T_0, T_X, T_Y) are shown in the sketches below. The upper values of T_X and T_Y are for one slide unit and the lower values are for two slide units in close contact.
(5) The shapes of grease nipple vary by size. The specifications are shown in Table 15 on page Ⅱ−104.
Remark: The identification numbers with * are our semi-standard items.

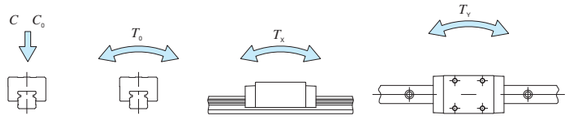

Example of identification number of assembled set

Model code	Dimensions	Part code	Model code	Dust protection code	Preload symbol	Classification symbol	Interchangeable code	Supplemental code
MHD	G	25	C2	R840			T1	P		/V
①	②	③	④	⑤	①	⑥	⑦	⑧	⑨	⑩

① Model

MHD LWHD(···B)	Block type mounting from top

② Length of slide unit

No symbol	Standard
G	Long

③ Size: 15, 25, 30

④ Number of slide unit (2)

⑤ Length of track rail (840 mm)

⑥ Dust protection code

No symbol	Standard specification
M	Ultra seal specification
MU	Ultra seal specification with track rail mounting from bottom

⑦ Preload amount

No symbol	Standard
T1	Light preload
T2	Medium preload
T3	Heavy preload

⑧ Accuracy class

H	High
P	Precision
SP	Super precision

⑨ Interchangeable

No symbol	Non-interchangeable specification
S1	S1 specification
S2	S2 specification

⑩ Special specification: A, BS, D, E, F, I , J, L, LF, MA MN, N, PS, Q, RE, T, UR, V, W, Y, Z

1N=0.102kgf=0.2248lbs.
1mm=0.03937inch

IKO C-Lube Linear Way MH

Block type mounting from top

Shape	MHD · LWHD
Size	8 · 10 · 12 · 15 · 25 · 30 · 35 · 45 · 55 · 65

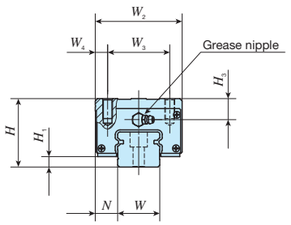

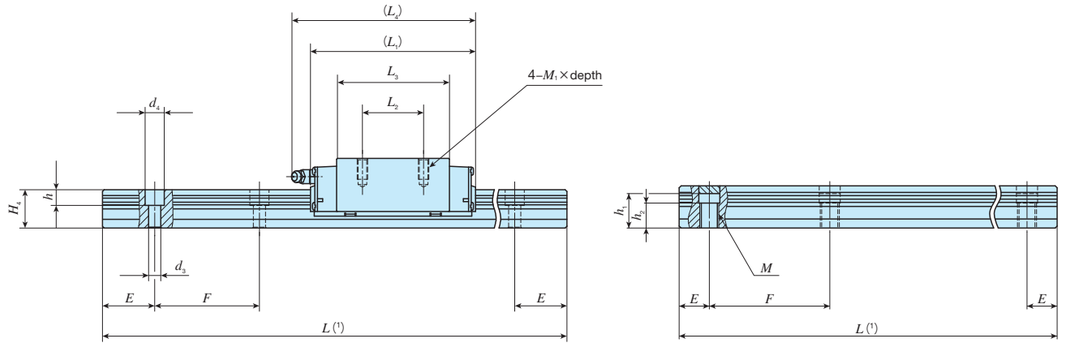

Ultra seal specification with track rail mounting from bottom

Identification number: MH series	Identification number: LWH series (No C-Lube)	Interchangeable	Mass (Ref.): Slide unit kg	Mass (Ref.): Track rail kg/m	Dimensions of assembly mm: H	H_1	N	Dimensions of slide unit mm: W_2	W_3	W_4	L_1	L_2	L_3	L_4	M_1×depth	H_3	Dimensions of track rail mm: W	H_4	d_3	d_4	h	M	h_1 (2)	h_2	E	F	Appended mounting bolt for track rail (3) mm: Bolt size× ℓ	Basic dynamic load rating (4): C N	Basic static load rating (4): C_0 N	Static moment rating (4): T_0 N·m	T_X N·m	T_Y N·m
MHD 35		○	1.74	6.85	55	10	18	70	50	10	123	50	86.2	135	M 8×16	17	34	28	9	14	12	–	–	–	40	80	M 8×28	48 700	53 700	823	631 3 480	579 3 190
	LWHD 35···B	○				8																									
–	LWHD 35···M*	–																													
–	LWHD 35···MU*	–																	–	–	–	M12	23	16			–				
MHDG 35		○	2.26			10					151	72	114	163					9	14	12	–	–	–			M 8×28	59 500	71 600	1 100	1 090 5 570	1 000 5 110
	LWHDG35	○				8																									
MHD 45		○	3.30	10.7	70	13	20.5	86	60	13	147	60	103.4	158	M10×20	23	45	34	14	20	17	–	–	–	52.5	105	M12×35	74 600	80 200	1 610	1 150 6 190	1 060 5 690
	LWHD 45···B	○				10																									
–	LWHD 45···M*	–																													
–	LWHD 45···MU*	–																	–	–	–	M16	29	17			–				
MHDG 45		○	4.57			13					190	80	146.6	201					14	20	17	–	–	–			M12×35	95 200	114 000	2 280	2 240 11 100	2 050 10 200
	LWHDG45	○				10																									
–	LWHD 55···B	○	5.36	15.5	80	13	23.5	100	75	12.5	183	75	132	194	M12×25	24	53	41	16	23	20	–	–	–	60	120	M14×45	113 000	121 000	2 870	2 210 11 600	2 030 10 600
–	LWHDG55	○	7.20								235	95	183.6	246														142 000	168 000	3 970	4 120 20 200	3 780 18 500
–	LWHD 65···B	○	9.80	22.2	90	14	31.5	126	76	25	229	70	164	239	M16×30	20	63	48	18	26	22	–	–	–	75	150	M16×50	176 000	184 000	5 180	4 130 22 000	3 790 20 200
–	LWHDG65	○	14.3								303	120	238.8	313														229 000	269 000	7 560	8 530 41 500	7 810 38 100

Notes (1) Track rail lengths L are shown in Table 2.1 on page Ⅱ−93 and Tables 2.3 and 2.4 on page Ⅱ−95.
(2) Choose bolts whose dimension allow fixing thread depth into track rail to be less than h_1.
(3) The appended track rail mounting bolts are hexagon socket head bolts equivalent to JIS B 1176.
In an assembled set of MH series and LWHD···MU model, track rail mounting bolts are not appended.
(4) The direction of basic dynamic load rating (C), basic static load rating (C_0), and static moment rating (T_0, T_X, T_Y) are shown in the sketches below. The upper values of T_X and T_Y are for one slide unit and the lower values are for two slide units in close contact.
Remarks 1. The specifications of grease nipple are shown in Table 15 on page Ⅱ−104.
2. The identification numbers with * are our semi-standard items.

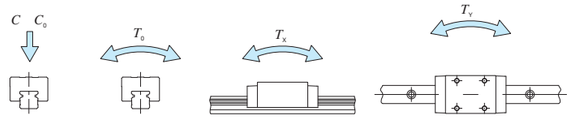

Example of identification number of assembled set

Model code	Dimensions	Part code	Model code	Dust protection code	Preload symbol	Classification symbol	Interchangeable code	Supplemental code
MHD	G	45	C2	R1260			T1	P		/V
①	②	③	④	⑤	①	⑥	⑦	⑧	⑨	⑩

① Model

MHD LWHD(···B)	Block type mounting from top

② Length of slide unit

No symbol	Standard
G	Long

③ Size

35, 45, 55, 65

④ Number of slide unit (2)

⑤ Length of track rail (1,260 mm)

⑥ Dust protection code

No symbol	Standard specification
M	Ultra seal specification
MU	Ultra seal specification with track rail mounting from bottom

⑦ Preload amount

No symbol	Standard
T1	Light preload
T2	Medium preload
T3	Heavy preload

⑧ Accuracy class

H	High
P	Precision
SP	Super precision

⑨ Interchangeable

No symbol	Non-interchangeable specification
S1	S1 specification
S2	S2 specification

⑩ Special specification

A, D, E, F, Ⅰ, J, L, LF, MA
MN, N, PS, Q, T, V, W, Y, Z

1N=0.102kgf=0.2248lbs.
1mm=0.03937inch

IKO C-Lube Linear Way MH

Compact block type mounting from top

Shape	MHS · LWHS 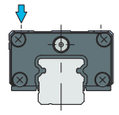			
Size	15	20	25	30

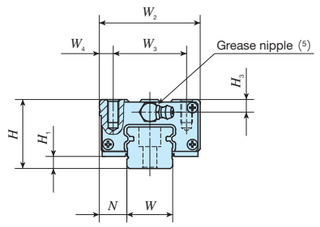

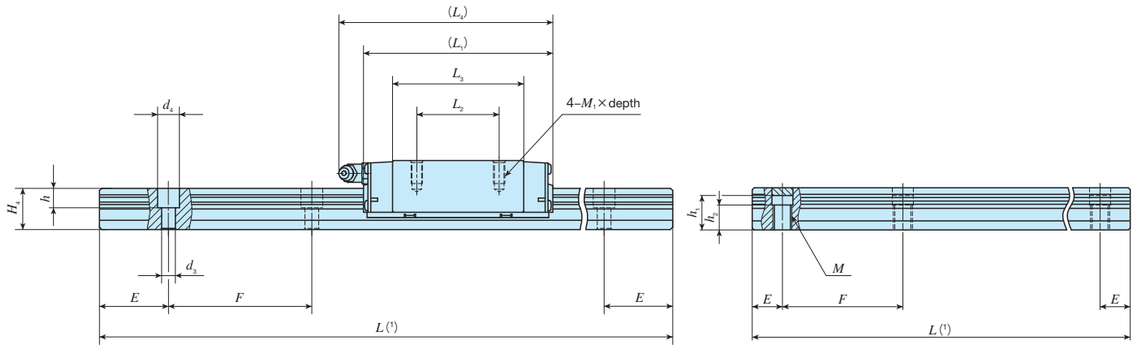

Ultra seal specification with track rail mounting from bottom

Identification number		Interchangeable	Mass (Ref.)		Dimensions of assembly mm			Dimensions of slide unit mm									Dimensions of track rail mm										Appended mounting bolt for track rail (3) mm	Basic dynamic load rating (4)	Basic static load rating (4)	Static moment rating (4)		
MH series	LWH series (No C-Lube)		Slide unit kg	Track rail kg/m	H	H_1	N	W_2	W_3	W_4	L_1	L_2	L_3	L_4	M_1×depth	H_3	W	H_4	d_3	d_4	h	M	h_1 (2)	h_2	E	F	Bolt size× ℓ	C N	C_0 N	T_0 N·m	T_X N·m	T_Y N·m
MHS 15		○	0.18	1.47	24	4.5	9.5	34	26	4	66	26	44.2	69	M4× 8	4.5	15	15	4.5	8	6	–	–	–	30	60	M4×16	11 600	13 400	112	95.6 / 556	95.6 / 556
	LWHS 15…B	○											44.6																		
MHS 15…SL		○											44.2																		
	LWHS 15…SL	○											44.6																		
–	LWHS 15…M*	–																	–	–	–	M6	12	9			–				
–	LWHS 15…MU*	–																													
MHSG 15	–	○	0.25								82		60.1	85					4.5	8	6	–	–	–			M4×16	14 400	18 300	153	172 / 918	172 / 918
MHS 20		○	0.36	2.56	30	5	12	44	32	6	83	36	56	94	M5×10	5.5	20	18	6	9.5	8.5	–	–	–	30	60	M5×18	18 100	21 100	232	195 / 1 090	195 / 1 090
	LWHS 20…B	○											57.2																		
MHS 20…SL		○											56																		
	LWHS 20…SL	○											57.2																		
–	LWHS 20…M*	–																	–	–	–	M8	13.5	9.5			–				
–	LWHS 20…MU*	–																													
MHSG 20		○	0.53								112	50	84.8	122					6	9.5	8.5	–	–	–			M5×18	24 100	31 700	349	421 / 2 140	421 / 2 140
	LWHSG20	○											86																		

Notes (1) Track rail lengths L are shown in Table 2.1 on page Ⅱ−93, Table 2.2 on page Ⅱ−94, and Tables 2.3 and 2.4 on page Ⅱ−95.
(2) Choose bolts whose dimension allow fixing thread depth into track rail to be less than h_1.
(3) The appended track rail mounting bolts are hexagon socket head bolts equivalent to JIS B 1176. For stainless steel model, stainless steel bolts are appended.
In an assembled set of MH series and LWHS…MU model, track rail mounting bolts are not appended.
(4) The direction of basic dynamic load rating (C), basic static load rating (C_0), and static moment rating (T_0, T_X, T_Y) are shown in the sketches below. The upper values of T_X and T_Y are for one slide unit and the lower values are for two slide units in close contact.
(5) The shapes of grease nipple vary by size. The specifications are shown in Table 15 on page Ⅱ−104.
Remark: The identification numbers with * are our semi-standard items.

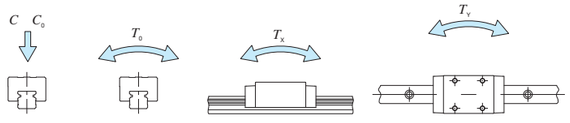

Example of identification number of assembled set

Model code		Dimensions	Part code		Model code	Dust protection code	Material code	Preload symbol	Classification symbol	Interchangeable code	Supplemental code
MHS	G	20	C2	R480				T1	P		/V
①	②	③	④	⑤	①	⑥	⑦	⑧	⑨	⑩	⑪

① Model

MHS	Compact block type mounting from top
LWHS(…B)	

② Length of slide unit

No symbol	Standard
G	Long

③ Size: 15, 20

④ Number of slide unit (2)

⑤ Length of track rail (480 mm)

⑥ Dust protection code

No symbol	Standard specification
M	Ultra seal specification
MU	Ultra seal specification with track rail mounting from bottom

⑦ Material type

No symbol	High carbon steel made
SL	Stainless steel made

⑧ Preload amount

No symbol	Standard
T1	Light preload
T2	Medium preload
T3	Heavy preload

⑨ Accuracy class

H	High
P	Precision
SP	Super precision

⑩ Interchangeable

No symbol	Non-interchangeable specification
S1	S1 specification
S2	S2 specification

⑪ Special specification: A, BS, D, E, F, I, J, L, LF, MA MN, N, Q, RE, T, V, W, Y, Z

1N=0.102kgf=0.2248lbs.
1mm=0.03937inch

IKO C-Lube Linear Way MH

Compact block type mounting from top

MHS · LWHS

Shape

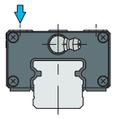

Size: 15 | 20 | 25 | 30

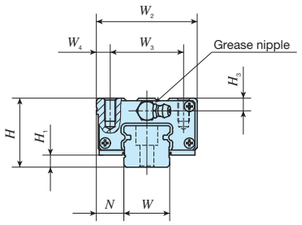

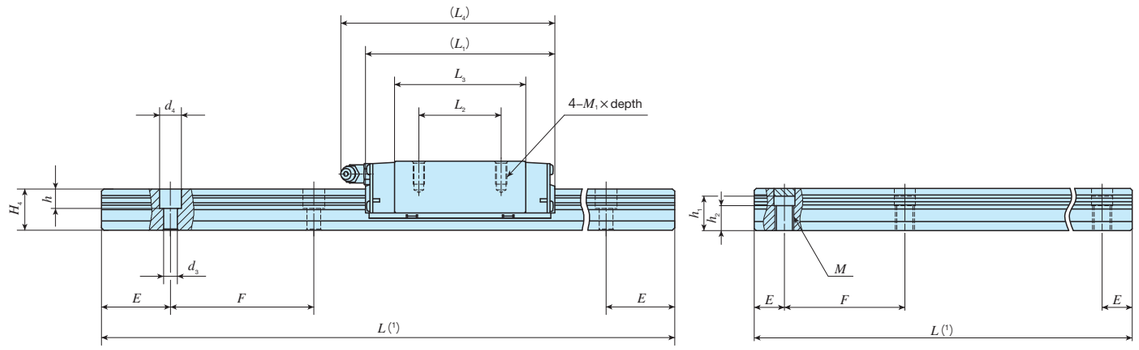

Ultra seal specification with track rail mounting from bottom

Identification number		Interchangeable	Mass (Ref.)		Dimensions of assembly mm			Dimensions of slide unit mm									Dimensions of track rail mm										Appended mounting bolt for track rail (3) mm	Basic dynamic load rating (4)	Basic static load rating (4)	Static moment rating (4)		
MH series	LWH series (No C-Lube)		Slide unit kg	Track rail kg/m	H	H_1	N	W_2	W_3	W_4	L_1	L_2	L_3	L_4	M_1×depth	H_3	W	H_4	d_3	d_4	h	M	h_1 (2)	h_2	E	F	Bolt size× ℓ	C N	C_0 N	T_0 N·m	T_X N·m	T_Y N·m
MHS 25		○	0.55	3.50	36	6.5	12.5	48	35	6.5	95	35	63.9	105	M6×12	6.5	23	22	7	11	9	–	–	–	30	60	M6×22	25 200	28 800	362	309 1 690	309 1 690
	LWHS 25···B	○											64.7																		
MHS 25···SL		○											63.9																		
	LWHS 25···SL	○											64.7																		
MHS 25···M*		–											63.9																		
	LWHS 25···M*	–											64.7																		
MHS 25···MU*		–											63.9						–	–	–	M10	18	13			–				
	LWHS 25···MU*	–											64.7																		
MHSG 25		○	0.67								118	50	86.6	128					7	11	9	–	–	–			M6×22	30 800	38 300	483	533 2 740	533 2 740
	LWHSG25	○											87.4																		
MHS 30		○	1.00	4.82	42	9	16	60	40	10	113	40	80.6	123	M8×16	8	28	25	9	14	12	–	–	–	40	80	M8×28	35 400	40 700	623	536 2 820	536 2 820
	LWHS 30···B	○				7																									
MHS 30···SL		○				9																									
	LWHS 30···SL	○				7																									
MHS 30···M*		–				9																									
	LWHS 30···M*	–				7																									
MHS 30···MU*		–				9													–	–	–	M12	20	13			–				
	LWHS 30···MU*	–				7																									
MHSG 30		○	1.29			9					139	60	106.6	149					9	14	12	–	–	–			M8×28	42 700	53 200	814	894 4 460	894 4 460
	LWHSG30	○				7																									

Notes (1) Track rail lengths L are shown in Table 2.1 on page Ⅱ−93, Table 2.2 on page Ⅱ−94, and Tables 2.3 and 2.4 on page Ⅱ−95.
(2) Choose bolts whose dimension allow fixing thread depth into track rail to be less than h_1.
(3) The appended track rail mounting bolts are hexagon socket head bolts equivalent to JIS B 1176. For stainless steel model, stainless steel bolts are appended.
In an assembled set of MH series and LWHS···MU model, track rail mounting bolts are not appended.
(4) The direction of basic dynamic load rating (C), basic static load rating (C_0), and static moment rating (T_0, T_X, T_Y) are shown in the sketches below. The upper values of T_X and T_Y are for one slide unit and the lower values are for two slide units in close contact.

Remarks 1. The specifications of grease nipple are shown in Table 15 on page Ⅱ−104.
2. The identification numbers with * are our semi-standard items.

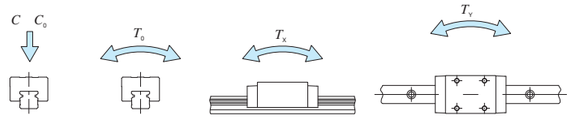

Example of identification number of assembled set

Model code	Dimensions	Part code	Model code	Dust protection code	Material code	Preload symbol	Classification symbol	Interchangeable code	Supplemental code
MHS	G	30	C2	R480				T1	P		/V
①	②	③	④	⑤	①	⑥	⑦	⑧	⑨	⑩	⑪

① Model

MHS	Compact block type mounting from top
LWHS(···B)	

② Length of slide unit

No symbol	Standard
G	Long

③ Size: 25, 30

④ Number of slide unit (2)

⑤ Length of track rail (480 mm)

⑥ Dust protection code

No symbol	Standard specification
M	Ultra seal specification
MU	Ultra seal specification with track rail mounting from bottom

⑦ Material type

No symbol	High carbon steel made
SL	Stainless steel made

⑧ Preload amount

No symbol	Standard
T1	Light preload
T2	Medium preload
T3	Heavy preload

⑨ Accuracy class

H	High
P	Precision
SP	Super precision

⑩ Interchangeable

No symbol	Non-interchangeable specification
S1	S1 specification
S2	S2 specification

⑪ Special specification: A, BS, D, E, F, I, J, L, LF, MA MN, N, PS, Q, RE, T, UR, V, W, Y, Z

1N=0.102kgf=0.2248lbs.
1mm=0.03937inch

IKO C-Lube Linear Way MH

Side mounting type

Shape: **LWHY**

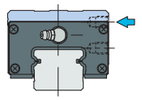

Size			
15	20	25	
30	35	45	

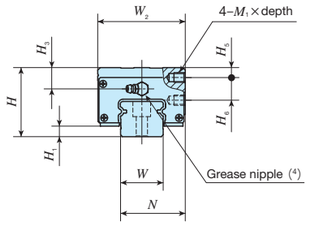

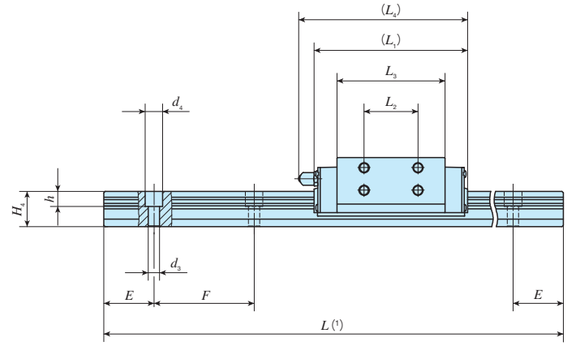

Identification number		Interchangeable	Mass (Ref.)		Dimensions of assembly mm			Dimensions of slide unit mm								Dimensions of track rail mm							Appended mounting bolt for track rail (2) mm	Basic dynamic load rating (3)	Basic static load rating (3)	Static moment rating (3)		
MH series	LWH series (No C-Lube)		Slide unit kg	Track rail kg/m	H	H_1	N	W_2	L_1	L_2	L_3	L_4	M_1×depth	H_3		H_5	H_6	W	H_4	d_3	d_4	h	E	F	Bolt size× ℓ	C N	C_0 N	T_0 N·m	T_X N·m	T_Y N·m
–	LWHY 15*	–	0.23	1.47	28	4.5	24.3	34	66	18	44.6	69	M 4× 4	8.5		4	9	15	15	4.5	8	6	30	60	M 4×16	11 600	13 400	112	95.6 / 556	95.6 / 556
–	LWHY 20*	–	0.36	2.56	30	5	31.5	43.7	83	25	57.2	94	M 5× 5	5.5		4	10	20	18	6	9.5	8.5	30	60	M 5×18	18 100	21 100	232	195 / 1 090	195 / 1 090
–	LWHY 25*	–	0.65	3.50	40	6.5	35	47.7	95	30	64.7	105	M 6× 6	10.5		6	12	23	22	7	11	9	30	60	M 6×22	25 200	28 800	362	309 / 1 690	309 / 1 690
–	LWHY 30*	–	1.12	4.82	45	7	43.5	59.7	113	40	80.6	123	M 6× 7	11		8	14	28	25	9	14	12	40	80	M 8×28	35 400	40 700	623	536 / 2 820	536 / 2 820
–	LWHY 35*	–	1.74	6.85	55	8	51.5	69.7	123	43	86.2	135	M 8× 9	17		8	18	34	28	9	14	12	40	80	M 8×28	38 000	41 900	823	631 / 3 480	579 / 3 190
–	LWHY 45*	–	3.30	10.7	70	10	65	85.7	147	55	103.4	158	M10×11	23		10	22	45	34	14	20	17	52.5	105	M12×35	58 300	62 600	1 610	1 150 / 6 190	1 060 / 5 690

Notes (1) Track rail lengths L are shown in Table 2.1 on page Ⅱ−93.
(2) The appended track rail mounting bolts are hexagon socket head bolts equivalent to JIS B 1176.
(3) The direction of basic dynamic load rating (C), basic static load rating (C_0), and static moment rating (T_0, T_X, T_Y) are shown in the sketches below. The upper values of T_X and T_Y are for one slide unit and the lower values are for two slide units in close contact.
(4) The shapes of grease nipple vary by size. The specifications are shown in Table 15 on page Ⅱ−104.
Remark: The identification numbers with * are our semi-standard items.

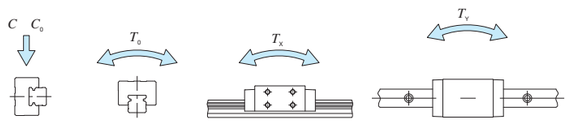

Example of identification number of assembled set

Model code	Dimensions	Part code		Preload symbol	Classification symbol	Supplemental code
LWHY	30	C2	R480	T1	P	/V
①	②	③	④	⑤	⑥	⑦

① Model
LWHY: Side mounting type

② Size
15, 20, 25, 30, 35, 45

③ Number of slide unit (2)

④ Length of track rail (480 mm)

⑤ Preload amount

No symbol	Standard
T1	Light preload
T2	Medium preload
T3	Heavy preload

⑥ Accuracy class

H	High
P	Precision
SP	Super precision

⑦ Special specification
A, E, F, Ⅰ, L, LF, MA, N, PS, RE, Y, Z

1N=0.102kgf=0.2248lbs.
1mm=0.03937inch