Datasheet - SLB440-ER-1-ST

Safety light barriers / SLB 440



(Minor differences between the printed image and the original product may exist!)

SLB 440 Series -

- Compact design With integral evaluation
- Height range 75 m (Reserve up to 90 m)
- Safe OSSD outputs to PLe
- Automatic start or restart interlock
- Sturdy metal enclosure with M12 connector or cable
- Version with heater for outdoor applications down to –30°C
- Set-up tool and diagnostic indication

Ordering details

Product type description	SLB440-ER-1-ST
Article number	103013521
EAN code	4030661492339
eCl@ss	27-27-27-01

Approval

Approval	TÜV USA/CAN

Classification

Standards	EN ISO 13849-1, EN 62061
PL	up e
Control category	up 4
PFH value	1.5 x 10^{-8} 1/h
SIL	up 3
Mission time	20 Years

Global Properties

Product name	SLB440
Standards	EN 61496-1; EN 61496-2
Compliance with the Directives (Y/N) CE	Yes
Operating resource protection class	Protection class 3

Safety type in accordance with IEC 61496-1	4
Materials	
- Material of the housings	Aluminium
Weight	140 g
Beam coding (Y/N)	Yes
Beam coding	1
Protection field height	–
Range of the protection field	300 … 15.000 mm
Reaction time	7 … 22 ms
Wave length of the sensors	880
Fade-out is possible (Y/N)	No
Override possible (Y/N)	No
reduced resolution (Y/N)	No
Clock control possible (Y/N)	No
Muting possible (Y/N)	No
Restart block (Y/N)	Yes
Master/slave function	No
Cascadable (Y/N)	No
Monitoring function of downstream devices (Y/N)	Yes
Recommended safety-monitoring module	PSC1, SRB-E-204ST

Mechanical data

Detection ability for test bodies	40 mm; V = 1.6 m/s
Number of beams	1 piece
Design of electrical connection	Connector M12
- Wiring of the transmitter	connector plug M12, 4-pole
- Wiring of the receiver	connector plug M12, 5-pole
Cable length	max. 100 m

Ambient conditions

Ambient temperature	
- Min. environmental temperature	−30 °C
- Max. environmental temperature	+50 °C
Storage and transport temperature	
- Min. Storage and transport temperature	−30 °C
- Max. Storage and transport temperature	+70 °C
Protection class	IP67 to IEC/EN 60529

Electrical data

Design of output switching element OSSD	PNP
Power consumption	
- Power consumption Transmitter	< 5 W
- Power consumption Receiver	< 5 W
Voltage type	DC
Switching voltage of the OSSD in high state	24 V ±10%

Outputs

Max. output current at secured output	200 mA

Electrical data - Safety outputs

Number of secure semi-conductor outputs	2 piece
Number of secure outputs with contact	–

LED switching conditions display

LED switching conditions display (Y/N)	Yes
Status and diagnostics	Yes
7-segment display	No

ATEX

Explosion protection categories for gases	None
Explosion protected category for dusts	None

Dimensions

Dimensions	
- Width	27.8 mm
- Height	91 mm
- Length	33 mm

Documents

Operating instructions (de, en) 1 MB, 04.04.2017
Code: mrl_slb440_de-en

BG-test certificate (en, de) 816 kB, 28.06.2017
Code: z_slbp02

Brochure (cn) 655 kB, 10.08.2017
Code: b_opto_slb_240_440_450_cn

Brochure (en) 435 kB, 26.07.2017
Code: b_opto_slb_240_440_450_en

Brochure (de) 439 kB, 06.07.2017
Code: b_opto_slb_240_440_450_de

Brochure (it) 458 kB, 29.08.2017
Code: b_opto_slb_240_440_450_it

Brochure (fr) 483 kB, 20.01.2017
Code: b_opto_slb_240_440_450_fr

Brochure (pt) 491 kB, 22.11.2016
Code: b_opto_slb_240_440_450_pt

Brochure (es) 491 kB, 18.11.2016
Code: b_opto_slb_240_440_450_es

Images

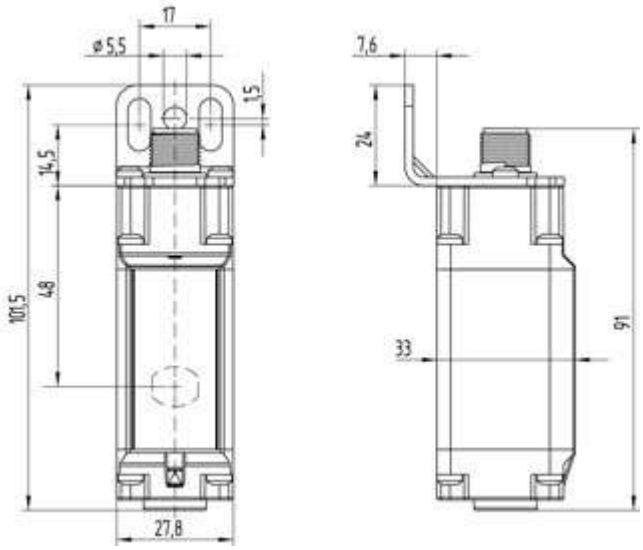

Dimensional drawing (basic component)

K.A. Schmersal GmbH & Co. KG, Möddinghofe 30, D-42279 Wuppertal
The data and values have been checked throroughly. Technical modifications and errors excepted.
Generiert am 05.10.2017 - 11:07:39h Kasbase 3.2.7.F.64I