KTC - Linear Motion Position Sensors

Ixthus Instrumentation

- Pulling Rod Type
- Durable bearing and slider,
- ∅ 33 Section, Standard 50-1250 mm
- Anodized Aluminium Housing
- Long Life, High Resolution
- Excellent Repeatability
- Smooth Low Noise Output from Conductive Plastic Track



KTC standard linear transducers are designed for direct absolute measurement and are available in different stroke lengths up to 1250 mm. The sensors have an exceptional resolution with repeatability of +/- 0.01 mm and outstanding linearity of +/- 0.05% maximum.

The sensor can be directly mounted into the mechanical system eliminating the use of racks and pinions or similar devices.

The KTC series has a solid stainless steel shaft with long bearings in the housing for a robust and smooth operation with long life. The slider has a ball coupling which reduces the effects of misalignment with the actuating part.

An improved technique for making a connnection to the resistance track (Double Trimming Technique) ensures the higher degrees of reliability and linearity, while multi-fingers wipers stabilize output signals, even in the most adverse working conditions. The fixing feet are adjustable to the desired positions.

Specifications

Mechanical	
Typical Life Cycle	> 100 x 10^6 cycles, > 25 x 10^6 m
Stroke	> 50 - 1250 mm
Linearity up to	± 0.05%
High Resolution	Infinite
Repeatability	± 0.01 mm
Max. operating speed	10 m/s
Environmental	
Housing	Anodized Aluminium Housing
Operating Temperature	-30... +100° C
Storage Temperature	-50...+120° C
Vibration	IEC 68-2-6:1982 10g
Shock	IEC 68-2-29:1968 40g
Rating	KTC - IP60 KTC-P - IP65
Misc	DIN 43650 ISO 4400 Connector Fuse Protected optional

Electrical	
Current resistance	≤ 10mA
Current wiper	≤ 1 mA
Operating Force	≤ 2N (KTC) ≤ 10N (KTC-P)
Power Consumption	3W - 10W
Output Smoothness	<± 0.1% against input voltage
Input Voltage	60 V max
Insulation Voltage	500V - 1min Residue < 5 µ A

Ordering information

(Please use the characters in the chart below to construct your product code)

Sample Code: KTC - 400 - P - 01

Series	Length	IP Rating	Accessories
KTC	50 200 375 600 1000 75 225 400 650 1250 100 250 425 700 130 275 450 750 150 300 500 800 175 350 550 900	P = Water proof IP65 Blank = Standard IP60	01 = KTC-01 Rod End Bearing 02 = KTC-02 Link Ball

All models include standard mounting kit and 4-pole connector.
Other lengths on request.

Variohm Group

Subject to change without notice

Ordering information cont.

KTC series		50	75	100	130	150	175	200	225	250	275	300	350	375	400	425	450	500	550	600	650	700	750	800	900	1000	1250
Total Electrical Travel(T.E)	mm	53	78	103	133	153	178	204	229	254	279	304	354	380	406	432	457	508	558	609	659	710	762	812	914	1017	1271
Active Electrical Travel (A.E)	mm	51	76	101	131	151	176	202	227	252	277	302	352	378	404	430	455	506	556	607	657	708	760	810	912	1015	1269
Resistance ±20%	kΩ	5	5	5	5	5	5	5	5	5	5	5	5	5	5	5	5	5	5	5	10	10	10	10	10	10	20
Independent Linearity	±%	0.05	0.05	0.05	0.05	0.05	0.05	0.05	0.05	0.05	0.05	0.05	0.05	0.05	0.05	0.05	0.05	0.05	0.05	0.05	0.05	0.05	0.05	0.05	0.05	0.05	0.05
Mechanical Travel (M.T)	mm	59	84	109	139	159	184	210	235	260	285	310	360	386	412	437	463	518	568	619	669	720	772	822	924	1027	1281
Resolution		infinite																									
Recommended Cursor Current	μA	< 1																									
Temperature Range	°C	-30 to +100																									
Dimensions (A)	mm	114	139	164	195	215	241	266	291	316	341	367	417	444	469	494	520	570	623	672	726	776	825	879	977	1086	1341

* Dimensions for reference only

Dimensions

MECHANICAL DIMENSIONS KTC

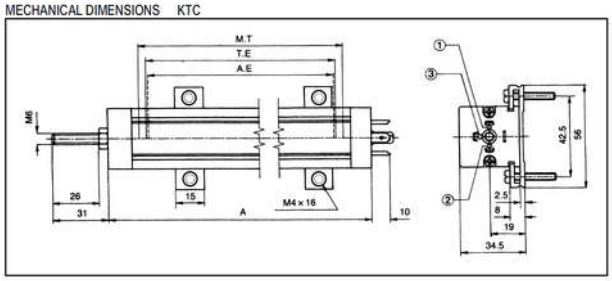

ROD END BEARING (KTC-01)

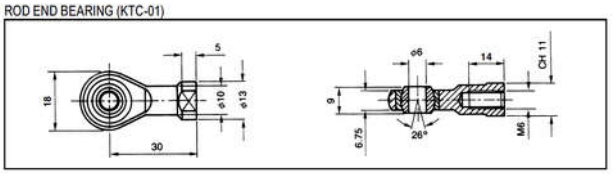

LINK BALL (KTC-02)

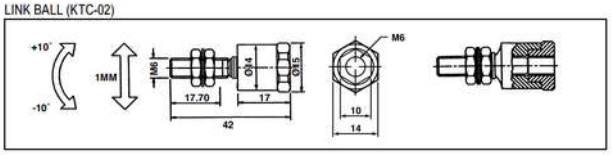

Electrical Connections

ELECTRICAL CONNECTIONS

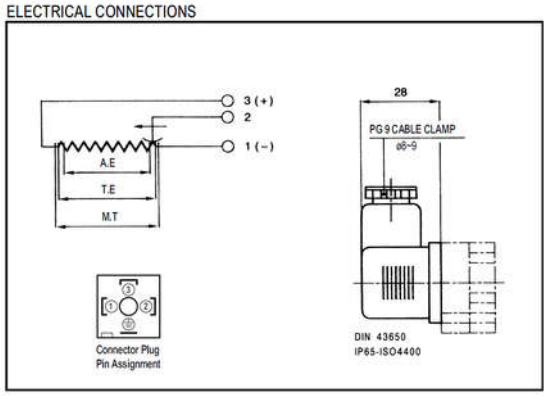

RECOMMENDED MEASUREMENT CIRCUIT

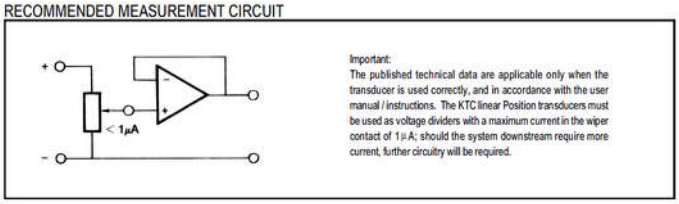

Ixthus Instrumentation - The Stables, Williams' Barn
Tiffield Road -Towcester - Northants -NN12 6HP - UK
sales@ixthus.com - www.ixthus.co.uk - +44 (0) 1327 353437

Subject to change without notice