Torx® keys

89S Long Torx® keys with spherical head

- Meets Torx® specifications.
- Spherical head provides a 20° working range for difficult-to-reach screws.
- Burnished finish.

	Torx® n°	I✱ mm	B x L mm	⚖ g
89S.15	T15	3,26	21,0 x 93,0	8
89S.20	T20	3,84	23,0 x 99,0	10
89S.25	T25	4,40	24,5 x 104,5	18
89S.27	T27	4,96	26,0 x 110,0	23
89S.30	T30	5,49	30,0 x 120,5	30
89S.40	T40	6,60	32,5 x 131,5	45
89S.45	T45	7,77	37,0 x 138,0	63

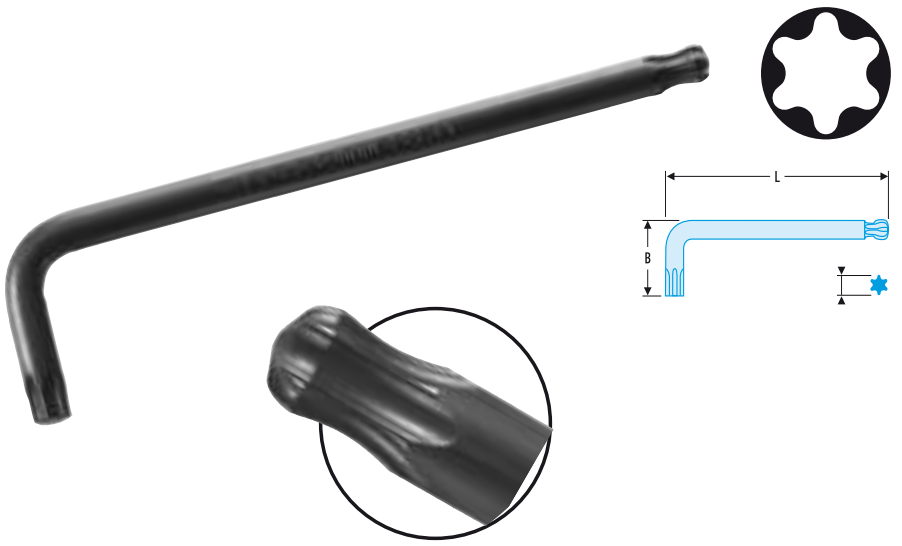

89 Short Torx® keys

- Meets Torx® specifications.
- Burnished finish.

	Torx® n°	I✱ mm	B x L mm	⚖ g
89.6	T6	1,65	18 x 51	3
89.7	T7	1,97	18 x 51,5	3
89.8	T8	2,30	18 x 51,5	3
89.9	T9	2,48	19,5 x 51,5	4
89.10	T10	2,72	19,5 x 53	4
89.15	T15	3,26	21,5 x 57	6
89.20	T20	3,84	24 x 61	8
89.25	T25	4,40	25,5 x 63,5	11
89.27	T27	4,96	27 x 67,5	16
89.30	T30	5,49	30 x 76	20
89.40	T40	6,60	34 x 83,5	31
89.45	T45	7,77	37 x 88,5	43
89.50	T50	8,79	41 x 106	62
89.55	T55	11,17	48 x 121	70

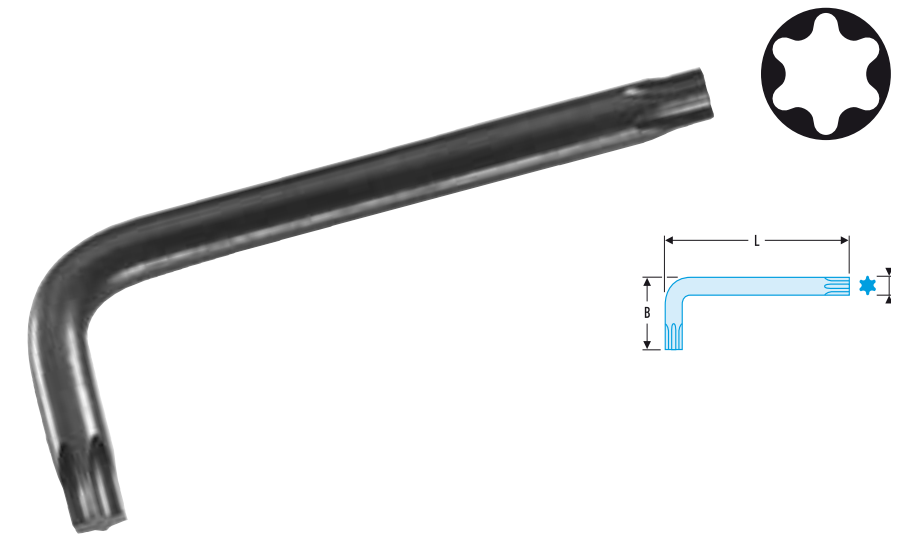

89R Short Resistorx® keys

- Meets Resistorx® specifications.
- For safety fasteners.
- Burnished finish.

	Torx® n°	I✱ mm	B x L mm	⚖ g
89R.10	T10	2,72	20 x 54	4
89R.15	T15	3,26	21 x 57	6
89R.20	T20	3,84	24 x 61	8
89R.25	T25	4,40	25 x 65	11
89R.30	T30	5,49	30 x 76	20
89R.40	T40	6,60	33 x 83	31

