Partial front panel, bottom-hinged	

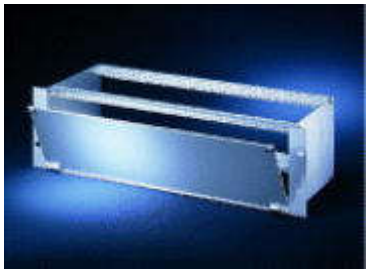

Article number: 20838-273

- For subracks and case, can be unhinged at 135° (subracks,ratiopacPRO, propac case)
- Usable height is not reduced
- For mounting on horizontal rails
- Unshielded

Unshielded

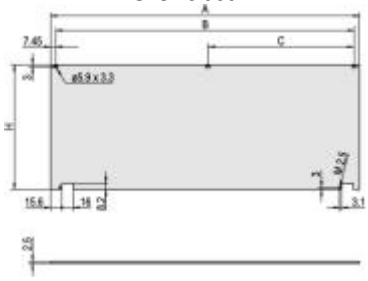

Shielded

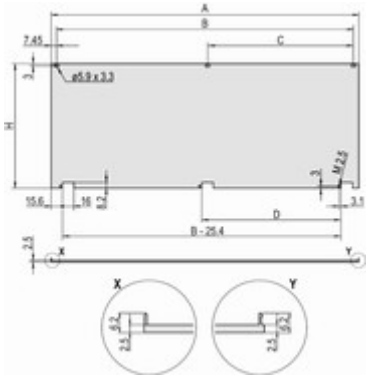

Delivery quantity: (kit)

Item	Qty	Description
1	1	Front panel, hinged, 2.5 mm aluminiumanodised, cut edges clean
2	2	Hinge, diecast zinc, nickel-plated
3	2	Sleeve, PA
4	2	Knurled screw M2.5 x 12.3, St, nikkel-plated
5	1	Assembly parts

Technical data:

Height	Width	A	B	C	H	Description
3 U	84 HP	426,4 mm	411,5 mm	208,3 mm	128,4 mm	Partial front panel, unshielded

Notes:

- Dimension C only by 84 Hp unshielded

Schroff®

Montageanweisung Frontplatte klappbar

Assembly instructions front panel, bottom-hinged

Instruction de montage faces avant modulaires abattantes

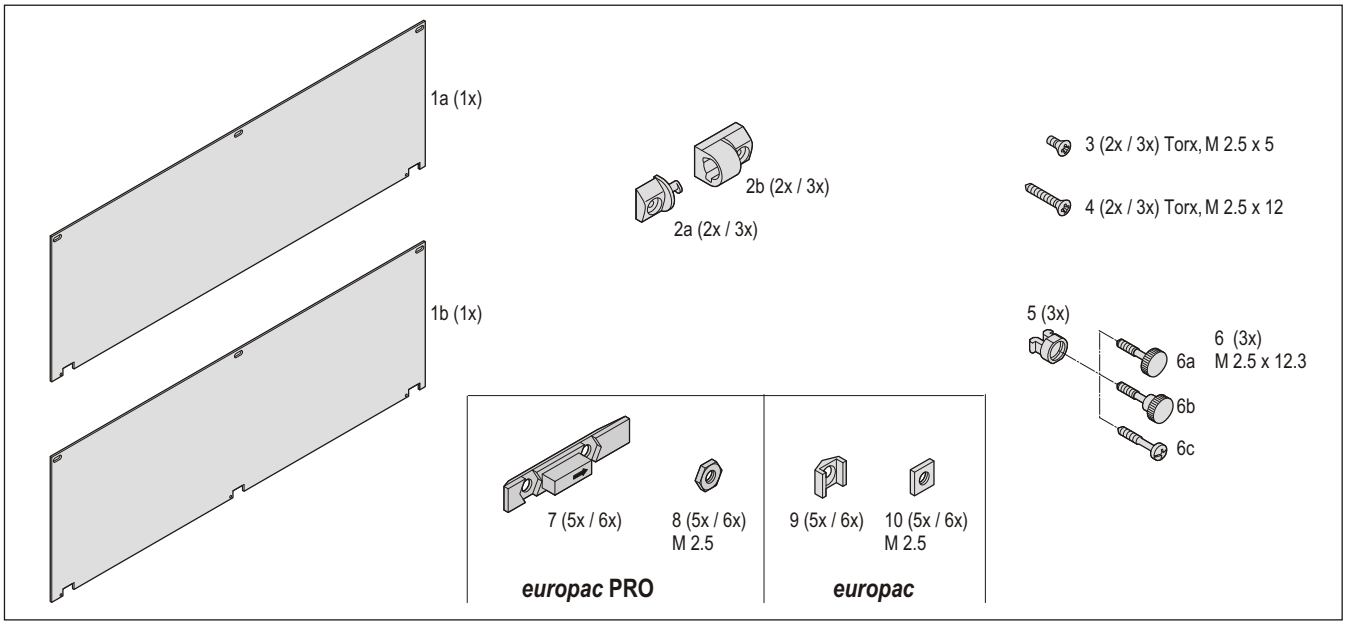

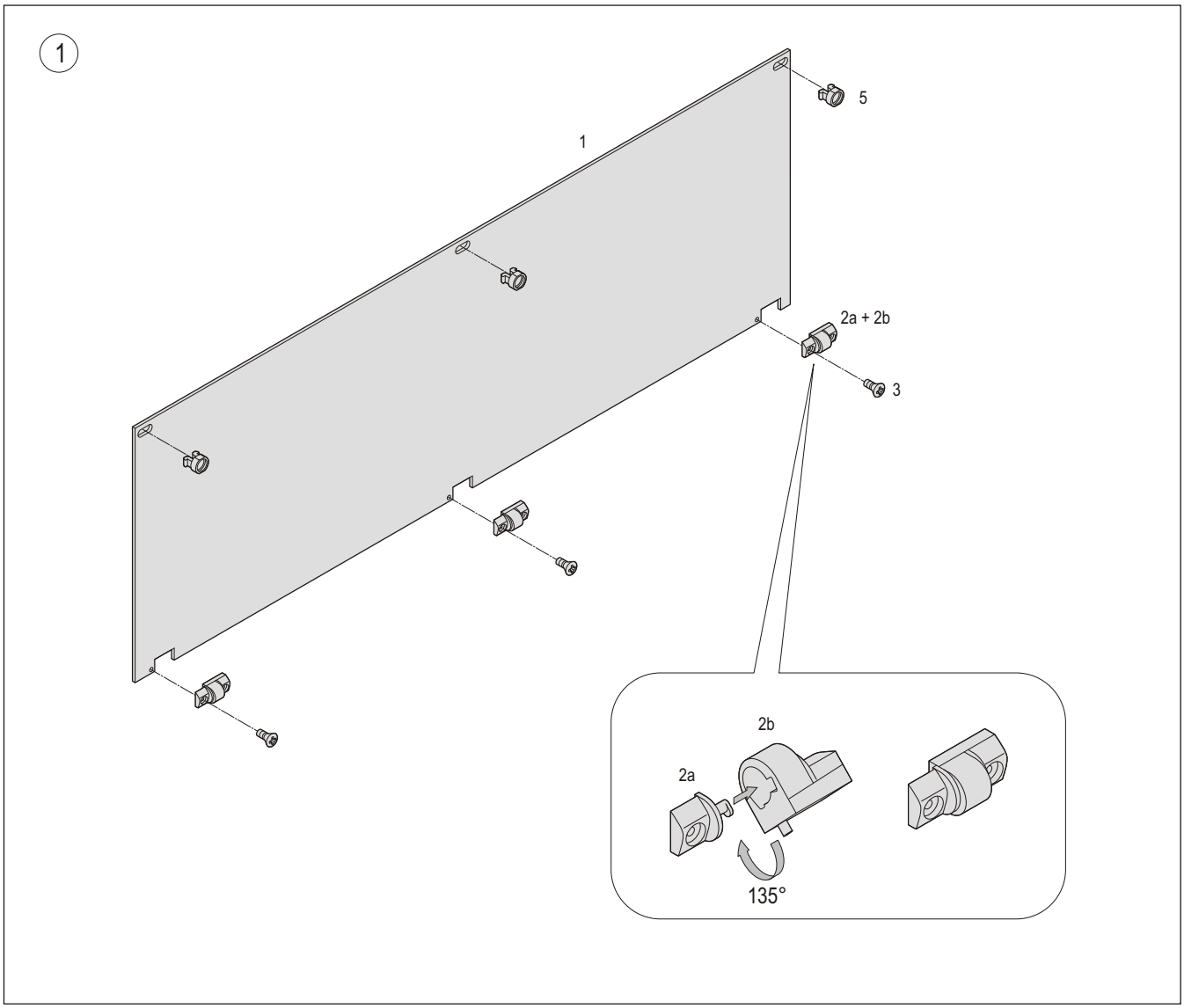

SCHROFF GmbH www.schroff.biz D/UK/F 07/03
Postfach 3 • D-75332 Straubenhardt • Telefon: +49(0)70 82 7 94-0 • Telefax: +49(0)70 82 7 94 200

Pentair Enclosures

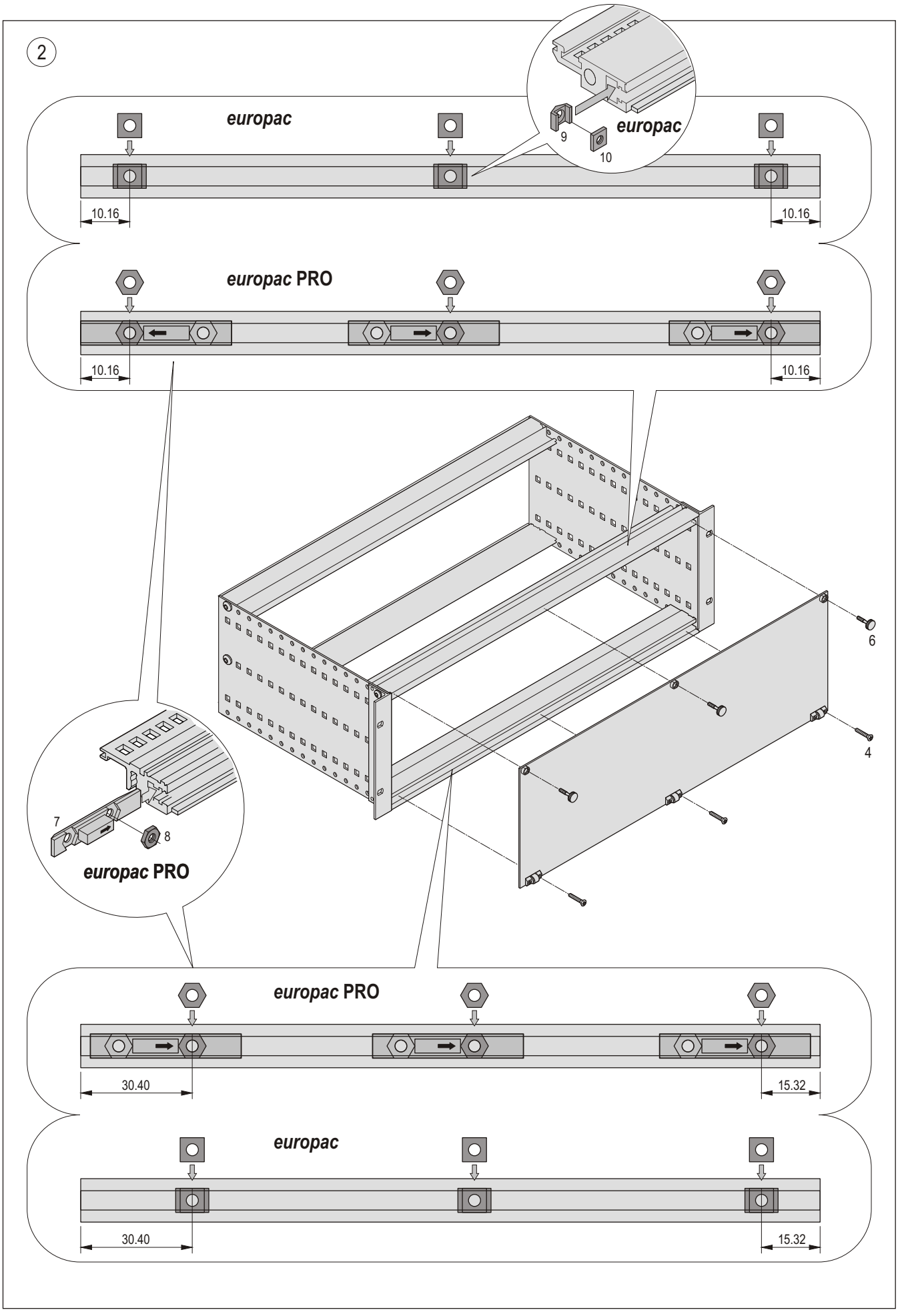
2
europac
9
10
europac
10.16
10.16
europac PRO
10.16
10.16
6
4
7
8
europac PRO
europac PRO
30.40
15.32
europac
30.40
15.32