Process transmitter
Model UPT-20, with pressure port
Model UPT-21, with flush diaphragm

for further approvals
see page 10

HART® COMMUNICATION PROTOCOL

Applications

- Control and process technology
- Machine building and plant construction
- Pharmaceutical and hygienic industries
- Food industry
- Chemical, petrochemical industry

Special features

- Multi-functional display
- Simple menu navigation
- Conductive plastic case or stainless steel case (optionally with electropolished surface)
- Large LC display, rotatable
- Approvals for hazardous areas



Fig. left: **Plastic case**
Fig. right: **Stainless steel case with electropolished surface**

Description

Instrument construction

The model UPT-2x process transmitter has been developed for applications which require an intelligent sensor. Particularly the integrated temperature compensation makes the process transmitter interesting for a wide range of applications.

The measuring cell is made of stainless steel 316L or of a combination with high-quality Elgiloy®. For specific requirements, further special materials are available.

The case is rotatable by 330° and the LC display can be mounted in different positions, displaceable in 90° steps. The LC display is easy to read in any mounting position, even from a distance of up to 5 m.

Elgiloy® is a trademark of the company "Specialty Metals"

HART® protocol

The process transmitter can be installed both in applications using analogue technique and modern systems communicating via the HART® protocol.

Via the display and operating module or the HART® interface this process transmitter can be configured directly on-site or remotely via a process control system.

Turndown

An adjustable turndown allows to register exact process values with optimised limits of the measuring values and without major restrictions of the accuracy.

Data sheets showing similar products:
Differential pressure transmitter; model DPT-10; see data sheet PE 86.21
Process transmitter with welded metal measuring cell; model IPT-2x; see data sheet PE 86.06
Process transmitter with capacitive ceramic measuring cell; model CPT-2x, see data sheet PE 86.07

WIKA
Part of your business

Specifications

Measuring ranges

Gauge pressure						
bar	0 ... 0.4	0 ... 1.6	0 ... 6	0 ... 16	0 ... 40	0 ... 100
	0 ... 250	0 ... 600	0 ... 1,000	0 ... 1,600	0 ... 2,500	0 ... 4,000
psi	0 ... 10	0 ... 15	0 ... 30	0 ... 100	0 ... 300	0 ... 500
	0 ... 1,500	0 5,000	0 ... 10,000	0 ... 15,000	0 ... 30,000	0 ... 50,000
	0 ... 60,000					

Absolute pressure						
bar	0 ... 1.6	0 ... 6	0 ... 16	0 ... 40		
psi	0 ... 30	0 ... 100	0 ... 300	0 ... 500		

Vacuum and +/- measuring ranges						
bar	-1 ... 0	-0.2 ... +0.2	-1 ... +0.6	-1 ... +5	-1 ... +15	-1 ... +40
psi	-14.5 ... 0	-14.5 ... +15	-14.5 ... +100	-14.5 ... +300	-14.5 ... +600	

For measuring ranges above 600 bar [10,000 psi] only the model UPT-20 is available.

Other measuring ranges can be set via turndown.
For example, a 0 ... 6 bar [0 ... 100 psi] instrument can also be used from -1 ... +6 bar [-14.5 ... +100 psi].
Values of less than 0 bar abs. [0 psia] cannot be set or measured.

Vacuum/overload safety	
Vacuum safety	Yes (not for oxygen applications)
Overload safety (standard version, version with cooling element)	
Measuring range ≤ 40 bar [500 psi]	3 times
Measuring range 40 ... 1,000 bar [500 .... 15,000 psi]	2 times
Measuring range 1,600 bar [30,000 psi]	1.5 times
Measuring range 2,500 bar [50,000 psi]	1.4 times
Measuring range 4,000 bar [60,000 psi]	1.25 times

Output signals

Output signals	
Signal types	■ 4 ... 20 mA ■ 4 ... 20 mA with HART® signal (option)
Load in Ω	■ ≤ U_+ - 12 V / 0.023 A (non-Ex) ■ ≤ U_+ - 14 V / 0.023 A (Ex)
	U_+ = Applied supply voltage (→ see “Supply voltage”)
Dampening	0 ... 99.9 s, adjustable
	After the set dampening time the instrument outputs 63 % of the applied pressure as output signal.
Settling time t_{90}	
Without HART®	60 ms
With HART®	80 ms
Refresh rate	
Without HART®	20 ms
With HART®	50 ms

Accuracy specifications

Accuracy specifications		
Accuracy at reference conditions [1]	■ 0.15 % of span ■ 0.1 % of span (option 1) ■ 0.2 % of span (option 2) ■ 0.5 % of span (> 1,000 bar [15,000 psi]) (option 3)	
Adjustability		
Zero point	-20 ... +95 % (downwards, the adjustability is always limited by the minimum pressure of 0 bar abs. [0 psia])	
Span	Measuring range ≤ 1,000 bar [15,000 psi]	-120 ... +120 % with a difference between zero point and span of max. 120 % of the nominal measuring range
	Measuring range > 1,000 bar [15,000 psi]	Max. (0 bar abs. [0 psia]) ... +105 % (downwards, the adjustability is always limited by the minimum pressure of 0 bar abs. [0 psia])
Turndown ratio	Unlimited	
	Measuring range ≤ 1,000 bar [15,000 psi]	Maximum recommended turndown 20:1
	Measuring range > 1,000 bar [15,000 psi]	Maximum recommended turndown 2:1
Mounting correction	-20 ... +20 %	
Non-repeatability		
Measuring ranges ≤ 1,000 bar [15,000 psi]	≤ 0.1 % of span	
Measuring ranges > 1,000 bar [15,000 psi]	≤ 0.5 % of span	
Behaviour with turndown [2]		
Measuring ranges from 0 ...1.6 bar to 0 ... 1,000 bar [0 ... 25 psi to 0 ... 15,000 psi]	TD ≤ 5:1	No influence on the accuracy
	TD > 5:1 ... ≤ 100:1	GES = GG x TD / 5
Measuring range < 1.6 bar [30 psi]	TD = 1:1	No influence on the accuracy
	TD > 1:1 ... ≤ 100:1	GES = GG x (TD + 4) / 5
Measuring range >1,000 bar [15,000 psi]	≤ 0.5 x TD	
Long-term stability		
Measuring range < 1 bar [14.5 psi]	0.35 %/year	
Measuring range ≥ 1 bar [14.5 psi]	0.15 %/year	
Measuring range ≥ 1.6 bar [30 psi]	0.1 %/year	
Measuring range ≥ 40 bar [600 psi]	0.1 %/year	
Measuring range > 1,000 bar [15,000 psi]	≤ 0.5 %/year	
Thermal change, zero point / span (reference temperature 20 °C [68 °F])		
In the temperature-compensated range 10 ... 70 °C [50 ... 158 °F]	No additional temperature error (only applies to measuring range up to 1,000 bar [15,000 psi])	
Outside compensated range	Typical < 0.1 %/10 K (for >1,000 bar [15,000 psi]: 0.2 %/10 K)	
Thermal change of the current output (reference temperature 20 °C [68 °F])		
< 18 °C and > 28 °C [< 64 °F and > 82 °F]	0.1 %/10 K (max. 0.15 %/10 K)	

1) Including non-linearity, hysteresis, zero offset and end value deviation (corresponds to measured error per IEC 61298-2).

2) **Legend**
GES: Overall accuracy via turndown
GG: Accuracy (e.g. 0.15 %)
TD: Turndown factor (e.g. 4:1 corresponds to TD factor 4)

Reference conditions (per IEC 61298-1)

Reference conditions (per IEC 61298-1)	
Temperature	23 °C ±2 °C [73 °F ±7 °F]
Supply voltage	DC 23 ... 25 V
Air pressure	860 ... 1,060 mbar [86 ... 106 kPa, 12.5 ... 15.4 psi]
Air humidity	45 ... 75 % r. h.
Characteristic curve determination	Terminal method per IEC 61298-2
Curve characteristics	Linear
Reference mounting position	Vertical, diaphragm points downward

Voltage supply

Voltage supply	
Voltage supply (non-Ex)	
Supply voltage U_+	DC 12 ... 36 V
Voltage supply (Ex)	
Supply voltage U_+	DC 14 ... 30 V
Maximum voltage U_i	DC 30 V
Maximum current I_i	100 mA
Maximum power P_i (gas)	1,000 mW
Maximum power P_i (dust)	750/650/550 mW (depending on the max. ambient temperature)
Effective internal capacitance	11 nF
Effective internal inductance	100 µH

→ For more information, see “Approvals”

Process connections

With pressure port (for model UPT-20)

Per standard	Thread size	Possible measuring ranges
EN 837	G ⅜ B	≤ 0 ... 1,000 bar [0 ... 15,000 psi]
	G ½ B	≤ 0 ... 1,000 bar [0 ... 15,000 psi]
	M20 x 1.5	≤ 0 ... 1,000 bar [0 ... 15,000 psi]
ANSI / ASME B1.20.1	½ NPT	≤ 0 ... 1,000 bar [0 ... 15,000 psi]
	½ NPT, female	≤ 0 ... 1,000 bar [0 ... 15,000 psi]
	¼ NPT	≤ 0 ... 1,000 bar [0 ... 15,000 psi]
-	M16 x 1.5 mm female with sealing cone	≥ 0 ... 100 bar [0 ... 1,500 psi]
	M20 x 1.5 mm female with sealing cone	≥ 0 ... 1,600 bar [0 ... 23,200 psi]
	9/16-18 UNF female F 250-C	≥ 0 ... 100 bar [0 ... 1,500 psi]
	1 1/8 -12 UNF female F 562-C	≥ 0 ... 100 bar [0 ... 1,500 psi]

With flush diaphragm (for model UPT-21)

Per standard	Thread size	Possible measuring ranges
-	G ½ B	0 ... 6 to 0 ... 600 bar [0 ... 100 to 0 ... 5,000 psi]
	G 1 B	≤ 0 ... 1.6 bar [0 ... 30 psi]
	G 1 ½ B	≤ 0 ... 1.6 bar [0 ... 30 psi]
	G 1 hygienic [1) 2)]	≤ 0 ... 16 bar [0 ... 100 psi]
	G 1 hygienic with cooling element [2)]	≤ 0 ... 16 bar [0 ... 100 psi]
	M44 x 1.25 with union nut	≤ 0 ... 40 bar [0 ... 500 psi]
TRI-CLAMP®	DN 1½ with cooling element for 150 °C [302 °F]	≤ 0 ... 40 bar [0 ... 500 psi] [4)]
	DN 2 with cooling element for 150 °C [302 °F]	≤ 0 ... 40 bar [0 ... 500 psi] [4)]
Clamp DIN 32676	DN 40 with cooling element for 150 °C [302 °F]	≤ 0 ... 40 bar [0 ... 500 psi] [4)]
	DN 50 with cooling element for 150 °C [302 °F]	≤ 0 ... 40 bar [0 ... 500 psi] [4)]
Grooved union nut DIN 11851 with conical coupling [3)]	DN 25 with cooling element for 150 °C [302 °F]	≤ 0 ... 40 bar [0 ... 500 psi]
	DN 50 with cooling element for 150 °C [302 °F]	≤ 0 ... 25 bar [0 ... 500 psi]
NEUMO BioConnect®	DN 40 form V with cooling element for 150 °C [302 °F]	≤ 0 ... 16 bar [0 ... 500 psi]
VARINLINE®	Form N with cooling element for 150 °C [302 °F] DN 40 ... 50	≤ 0 ... 16 bar [0 ... 500 psi]
	Form F with cooling element for 150 °C [302 °F] DN 25	≤ 0 ... 16 bar [0 ... 500 psi]

BioConnect® is a registered trademark of the company NEUMO.
VARINLINE® is a registered trademark of GEA Tuchenhagen GmbH.

1) Also available as a high-temperature version up to 150 °C [302 °F].
2) Suitable for WIKA adapter system model 910.61, → see data sheet AC 09.20
3) For a 3-A-compliant connection of process connections with milk thread fittings per DIN 11851, profile sealings from SKS Komponenten BV or Kieselmann GmbH have to be used.
4) For the maximum pressure, the permissible pressure rating of the clamp must be observed.

Pressure transmission medium

Model	Medium
Model UPT-20	Measuring range ≤ 40 bar [500 psi]: Synthetic oil (halocarbon oil for oxygen applications)
	Measuring range > 40 bar [500 psi]: Dry measuring cell
Model UPT-21	Synthetic oil

In general, for oxygen applications, halocarbon oil. The application demands special cleaning processes which ensure oil- and grease-free surfaces.
Optionally FDA-listed media for the food industry are available.

Diaphragm seal

By using diaphragm seals, it is possible to adapt the model UPT-20 process transmitter to even the most difficult of conditions in the process industry. Thus, the transmitter can be used at extreme temperatures, and with aggressive, corrosive, heterogeneous, abrasive, highly viscous or toxic media. As a result of the wide variety of aseptic connections (such as clamp, threaded pipe or DIN 11864 aseptic connections) measuring assemblies meet the high demands of sterile process engineering.



Application in engineered diaphragm seal solutions

As a special variant, the model UPT-20 is used in the model DMSU21SA. With this, the display and operation of the model UPT-20 is used with adapted firmware and extended electronics. A pressure switch, mounted in addition, constantly monitors a double diaphragm to ensure the separation of particularly sensitive media. As soon as the first measuring diaphragm breaks, the electronics of the UPT-20 also issues a warning via the HART® signal. This means that the user still has time to change the measuring assembly without causing a failure in the production of, for example, pharmaceutical products.

Materials

Model	Measuring ranges	Process connections	Materials	
Materials (wetted)				
UPT-20	≤ 40 bar [500 psi]	All	Standard	Process connection: Stainless steel 1.4404 / 316L Sensor: Stainless steel 1.4404 / 316L
	> 40 bar [500 psi]	All	Standard	Process connection: Stainless steel 1.4404 / 316L Sensor: Elgiloy® 2.4711
	> 1,000 bar [15,000 psi]	All	Standard	Process connection: Stainless steel 1.4534 / 904L Sensor: Stainless steel 1.4534 / 904L
UPT-21	All	All	Standard	Process connection: Stainless steel 1.4435 / 316L Diaphragm: Stainless steel 1.4435 / 316L
		■ G ½ ■ G 1	Option 1	Process connection: Hastelloy® HC276 / 2.4819 Diaphragm: Hastelloy HC276 / 2.4819
		■ G ½ ■ G 1	Option 2	Process connection: Gold-plated Diaphragm: Gold-plated [1]

1) Accuracy 0.1 % not available for gold-plated sensors.

All connections are NACE MR0103 and MR0175 compatible. No NACE for measuring ranges > 1,000 bar [15,000 psi] (→ see page 11)

Elgiloy® is a trademark of the company "Specialty Metals"

Hydrogen applications

With the measurement of hydrogen, preferably, a gold-plated diaphragm should be used. If this is not technically possible, a higher long-term drift should be expected.
Our technical support is available for questions. Use with pressures ≥1,600 bar is not recommended.

Sealing material

→ See table under Operating conditions, medium temperature

Case	
Option 1	Plastic (PBT) with conductive surface per EN 60079-0:2012 Colour: Night blue RAL5022
Option 2	Stainless steel case 1.4308 (CF-8), precision cast (suitable for chemical and petrochemical industries)
Option 3	Stainless steel case 1.4308 (CF-8) with electropolished surface (suitable for pharmaceutical, food and hygienic industries)
Option 4 [1]	Stainless steel case coated with epoxy resin
Option 5 [1]	Stainless steel case, electropolished and coated with epoxy resin

1) Not suitable for Ex applications.

Electrical connection

Electrical connection		
Spring-loaded terminals	Wire cross-section: Wire or strand: 0.2 ... 2.5 mm² (AWG 24 ... 14) Strand with end splice: 0.2 ... 1.5 mm² (AWG 24 ... 16)	
Cable glands M20 x 1.5		
Plastic, PA	Sealing	NBR
	Cable diameter	6 ... 12 mm [0.24 ... 0.47 in]
	Ingress protection per IEC 60529	IP66/67
Brass, nickel-plated	Sealing	NBR
	Cable diameter	5 ... 9 mm [0.2 ... 0.35 in]
	Ingress protection per IEC 60529	IP66/67
Stainless steel cable gland	Sealing	NBR
	Cable diameter	7 ... 12 mm [0.28 ... 0.47 in]
	Ingress protection per IEC 60529	IP66/67
Stainless steel cable gland in hygienic design	Sealing	FDA-compliant
	Cable diameter	6 ... 12 mm [0.24 ... 0.47 in]
	Ingress protection per IEC 60529	IP66/67
Angular connector DIN 175301-803A with mating connector	Wire cross-section	Max. 1.5 mm² (AWG 16)
	Ingress protection per IEC 60529	IP65 [1)]
Circular connector M12 x 1 (4-pin) without mating connector	Ingress protection per IEC 60529	IP65 [1)]
Electrical safety	Reverse polarity protection	

1) The stated ingress protection only applies when plugged in using mating connectors that have the appropriate ingress protection.

Connection diagrams

Cable gland M20 x 1.5 and spring-loaded terminals

Outlet for connection cable

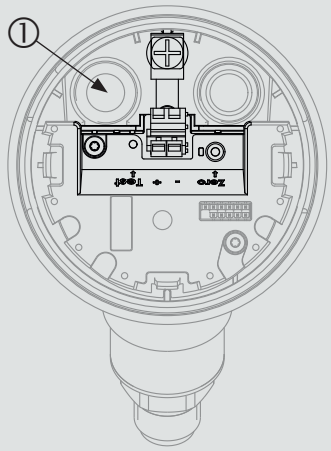

Pin assignment

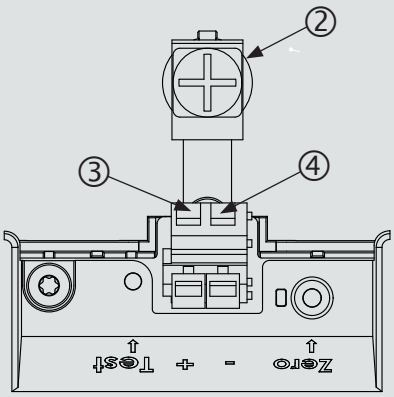

① Cable gland
② Shield
③ Positive power supply terminal
④ Negative power supply terminal

Legend
U_+ Positive power supply terminal
U_- Negative power supply terminal

Display and operating unit, model DI-PT-U (option)

Display and operating unit, model DI-PT-U (option)		
Display type	LC display [1]	
Refresh rate	200 ms	
Main display	4 ½-digit	
Segment display	Character size 14 mm [0.55 in]	
Additional display	Selectable via menu, three-line scale range	
Bar graph display	20 segments, radial, pressure gauge simulation	
Adjustable units		
Pressure units	■ bar ■ psi ■ mbar ■ MPa ■ kPa ■ hPa ■ Pa ■ mH_2O ■ mmH_2O	■ ftH_2O ■ inH_2O ■ mHg ■ mmHg ■ inHg ■ kg/cm^2 ■ g/cm^2 ■ Torr
Level units	■ m ■ cm ■ mm ■ ft ■ in	
Volume units	■ l ■ m^3 ■ gal ■ $inch^3$ ■ ft^3 ■ %	
Free unit	A free character string (6 characters) can be defined as a unit	
Operating state	Display via symbols	
Operating temperature	By using the display and operating unit, the operating temperature is limited to -20 ... +60 °C [-4 ... +140 °F]	
Storage temperature	-40 ... +80 °C [-40 ... +176 °F]	
Operation	4 buttons for the recall and operation of the settings	
Colours		
Background	Light grey	
Digits	Black	
Upgradable	Yes (→ see “Accessories”)	
Display size	Separated into main and segment displays	
Ingress protection per IEC 60529	■ IP20 (loose) ■ IP40 (built-in without cover)	
Material	Case from ABS, window from polyester film	

1) For the process transmitter only this display may be used. → For order number see Accessories.

Operating conditions

Operating conditions	
Range of applications	Suitable for internal and external operation, exposure to direct sunlight is permitted
Permissible air humidity	≤ 93 % r. h.
Permissible temperature ranges	
Ambient	■ -20 ... +60 °C [-4 ... +140 °F] (with digital display) ■ -40 ... +80 °C [-40 ... +176 °F] [1] (without digital display)

Operating conditions		
Medium	Oxygen application	-20 ... +60 °C [-4 ... +140 °F]
	Model UPT-20	■ -40 ... +85 °C [-40 ... +185 °F] ■ -40 ... +105 °C [-40 ... +221 °F] at max. 40 °C [104 °F] ambient temperature ■ -40 ... +120 °C [-40 ... +248 °F] at max. 30 °C [86 °F] ambient temperature
	UPT-21 without cooling element	■ 85 °C [185 °F] at max. 80 °C [176 °F] ambient temperature ■ 105 °C [221 °F] at max. 40 °C [104 °F] ambient temperature ■ 120 °C [248 °F] at max. 30 °C [86 °F] ambient temperature
	UPT-21 with cooling element	■ 85 °C [185 °F] at max. 80 °C [176 °F] ambient temperature ■ 120 °C [248 °F] at max. 50 °C [122 °F] ambient temperature ■ 150 °C [302 °F] at max. 40 °C [104 °F] ambient temperature
Storage	-40 ... +80 °C [-40 ... +176 °F]	
Restrictions to medium temperature due to sealing material (only for model UPT-21)		
NBR	-20 ... +105 °C [-4 ... +221 °F]	
FKM	-20 ... +105 °C [-4 ... +221 °F]	
FKM	-20 ... +150 °C [-4 ... +302 °F] 2)	
EPDM	-40 ... +105 °C [-40 ... +221 °F]	
EPDM	-40 ... +150 °C [-40 ... +302 °F] 1)	
Vibration resistance per EN 60068-2-6	4 g (5 ... 100 Hz) per GL characteristic curve 2	
Shock resistance		
Measuring range ≤ 1,000 bar [15,000 psi]	150 g (3.2 ms) per IEC 60068-2-27	
Measuring range > 1,000 bar [15,000 psi]	20 g at 4.6 ms	
Ingress protection per IEC 60529	■ IP66/67 ■ IP65 (version with circular connector, angular connector or overvoltage protection)	
	The ingress protection only applies with closed case head and closed cable glands.	
Explosion protection	→ See approvals	

1) Instrument with angular connector or circular connector: -30 ... +80 °C [-22 ... +176 °F]
2) Process connection with cooling element

Additional specifications for temperature ranges for Ex protection

For Ex instruments, the following temperature ranges apply, in addition to the temperature ranges for non-Ex instruments.
Temperature class / surface temperatures for all variants **without** cooling element:

Temperature class / surface temperature	Ambient and medium temperature
T5, T6	-40 ≤ Ta ≤ +60 °C [-40 ≤ Ta ≤ +140 °F]
T4	-40 ≤ Ta ≤ +80 °C [-40 ≤ Ta ≤ +176 °F]
T135 °C [T257 °F]	
Pi = 750 maW	-40 ≤ Ta ≤ +40 °C [-40 ≤ Ta ≤ +104 °F]
Pi = 650 mW	-40 ≤ Ta ≤ +70 °C [-40 ≤ Ta ≤ +158 °F]
Pi = 550 mW	-40 ≤ Ta ≤ +80 °C [-40 ≤ Ta ≤ +176 °F]

Temperature class / surface temperatures for all variants **with** cooling element:

Temperature class	Max. medium temperature	Ambient temperature
T4	120 °C [248 °F]	-40 ≤ Ta ≤ +50 °C [-40 ≤ Ta ≤ +122 °F]
T3	150 °C [302 °F]	-40 ≤ Ta ≤ +40 °C [-40 ≤ Ta ≤ +104 °F]

Approvals (option)

Logo	Description	Country
CE	**EU declaration of conformity**	European Union
	EMC directive, interference emission (group 1, class B) and immunity per EN 61326-1:2013 (industrial application), EN 61326-2-3:2013 [1)]	
	Pressure equipment directive	
	RoHS directive	
Ex	**ATEX directive** - Ex i Zone 1 mounting to zone 0 gas [II 1/2G Ex ia IIC T4/T5/T6 Ga/Gb] Zone 1 gas [II 2G Ex ia IIC T4/T5/T6 Gb] Zone 2 gas [II 3G Ex ic IIC T4/T5/T6 Gc] Zone 21 mounting to zone 20 dust [II 1/2D Ex ia IIIC T135 °C Da/Db] Zone 21 dust [II 2D Ex ia IIIC T135 °C Db]	
IEC IECEx	**IECEx** Hazardous areas - Ex i Zone 1 mounting to zone 0 gas [Ex ia IIC T6 ... T3 Ga/Gb] Zone 1 gas [Ex ia IIC T6 ... T3 Gb] Zone 2 gas [Ex ic IIC T6 ... T3 Gc] Zone 21 mounting to zone 20 dust [Ex ia IIIC T135 °C Da/Db] Zone 21 dust [Ex ia IIIC T135 °C Db]	International
EAC Ex	**EAC** ■ Pressure equipment directive ■ Electromagnetic compatibility ■ Hazardous areas - Ex i Zone 1 mounting to zone 0 gas [Ga/Gb Ex ia IIC T6 ... T3 X] Zone 1 gas [1Ex ia IIC T6 ... T3 Gb X] Zone 2 gas [2Ex ic IIC T6 ... T3 Gc X] Zone 21 dust [Ex ia IIIC T135°C Db X]	Eurasian Economic Community
	GOST Metrology, measurement technology	Russia
	KazInMetr Metrology, measurement technology	Kazakhstan
	MTSCHS Permission for commissioning	Kazakhstan
	UkrSEPRO Metrology, measurement technology	Ukraine
	Ex Ukraine ■ Mining ■ Hazardous areas - Ex i Zone 1 mounting to zone 0 gas [II 1/2G EEx ia IIC T4/T5/T6 Ga/Gb] Zone 21 mounting to zone 20 dust [II 1/2D IP6X T130 °C/T95 °C/T80 °C]	Ukraine
	Uzstandard Metrology, measurement technology	Uzbekistan
INMETRO	**INMETRO** ■ Metrology, measurement technology ■ Hazardous areas - Ex i Zone 1 mounting to zone 0 gas [Ex ia IIC T* Ga/Gb] Zone 1 gas [Ex ia IIC T* Gb] Zone 2 gas [Ex ic IIC T* Gc] Zone 21 mounting to zone 20 dust [Ex ia IIIC T135 °C Da/Db] Zone 21 dust [Ex ia IIIC T135 °C Db]	Brazil

Logo	Description	Country
	KCs (KOSHA) Hazardous areas - Ex i Zone 1 to zone 0 [Ex ia IIC T3 ... T6] Zone 1 [Ex ia IIC T3 ... T6] Zone 21 to zone 20 [Ex iD A21 135 °C] Zone 21 [Ex iD A21 135 °C] - Ex n Zone 2 [Ex nL IIC T3 ... T6]	South Korea
	3-A Food This instrument is 3-A marked, based on a third party verification for conformance to the 3-A standard.	International
	EHEDG Hygienic Equipment Design	European Union

1) With electrostatic discharge, a short-term, increased error of up to 1 % of the nominal measuring range can occur.

Manufacturer's information and certificates

NAMUR recommendations
NAMUR is the automation technology interest group for the process industry in Germany. The published NAMUR recommendations are considered standards in field instrumentation, and also have the character of international standards.

The instrument fulfils the requirements of the following NAMUR recommendations:
- NE21 - Electromagnetic compatibility of equipment
- NE43 - Signal level for failure information for transmitters
- NE53 - Compatibility of field instruments and display and operating components
- NE107 - Self-monitoring and diagnostics of field instruments

→ For further information, see www.namur.net/en

NACE
NACE is a term for an organisation (National Association of Corrosion Engineers) concerned with the topic of corrosion. The results of this organisation are published as NACE standards and regularly updated.
The instruments and, in particular, the weld seams fulfil:
- NACE MR0103 - Applications in oil refineries
- NACE MR0175 - Oil extraction and processing

FDA-compliant filling and sealing
The FDA is the American supervisory authority for the area of "food and drugs", which also controls all goods placed on the market. An important topic is the use of substances that can come into contact with foodstuffs. Stainless steels are generally not critical, but plastics (e.g. sealings) and liquids (e.g. pressure transmission media) for use in food, pharmaceutical and biotechnology applications must be designed in accordance with the requirements of the FDA.

Some of the substances in these instruments are classified as FDA-compliant.

Certificates (option)

- Test certificate for the measurement accuracy included in delivery (5 measuring points in the scaled range)
- 2.2 test report
- 3.1 inspection certificate
- Manufacturer's declaration regarding regulation (EC) 1935/2004
- Manufacturer's declaration regarding regulation (EC) 2023/2006 (GMP)
- DKD/DAkkS calibration per IEC 17025

→ Approvals and certificates, see website

Dimensions in mm [in]

Process connections for model UPT-20

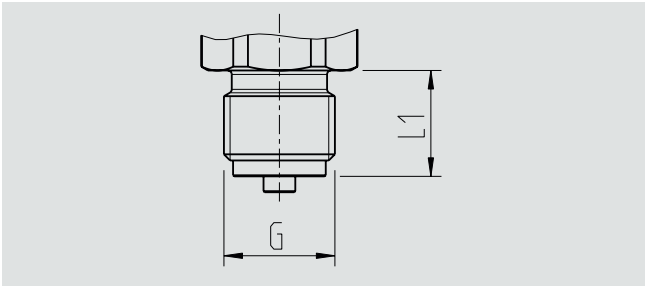

G	L1
G ⅜ B	16 [0.63]
G ½ B	20 [0.79]
M20 x 1.5	20 [0.79]

Hexagon dimension: 12 mm [0.47 in]
Spanner width: 27 mm [1.06 in]

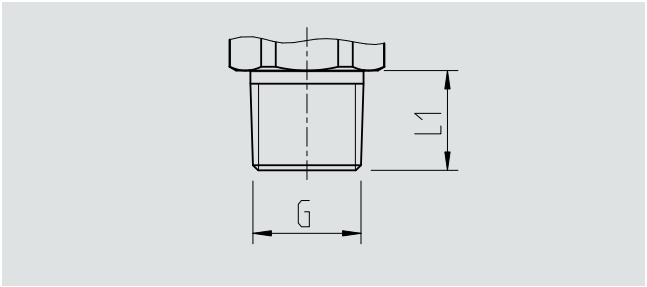

G	L1
¼ NPT	13 [0.51]
½ NPT	19 [0.75]

Hexagon dimension: 12 mm [0.47 in]
Spanner width: 27 mm [1.06 in]

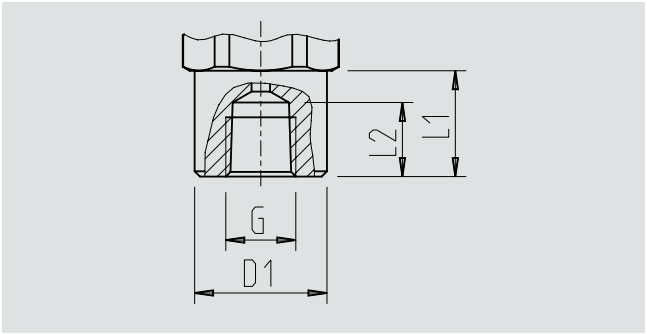

G	L1	L2	D1
Measuring ranges ≤ 40 bar [500 psi]			
½ NPT, female	20 [0.79]	19 [0.75]	26.5 [1.04]
Measuring ranges > 40 bar [500 psi]			
½ NPT, female	20 [0.79]	19 [0.75]	40.5 [1.59]

Measuring ranges ≤ 40 bar [500 psi]
Hexagon dimension: 10 mm [0.4 in]
Spanner width: 27 mm [1.06 in]

Measuring ranges > 40 bar [500 psi]
Hexagon dimension: 12 mm [0.47 in]
Spanner width: 41 mm [1.61 in]

High-pressure connection

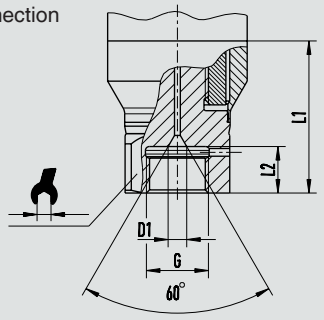

G	L1	D1	SW
M16 x 1.5	12 [0.47]	4.8 [0.19]	27 [1.06]
M20 x 1.5	15 [0.59]	4.8 [0.19]	27 [1.06]

M16 x 1.5 for measuring ranges from 100 bar [1,500 psi] to 4,000 bar [60,000 psi]
M20 x 1.5 for measuring ranges from 1,600 bar [30,000 psi] to 4,000 bar [60,000 psi]

High-pressure connection

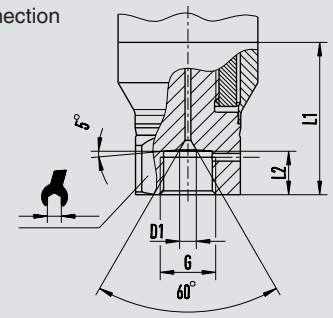

G	L1	D1	SW
9/16-18 UNF female F 250-C	11.2 [0.44]	4.3 [0.17]	27 [1.06]
1 1/8 -12 UNF female F 562-C	19.1 [0.75]	9.7 [0.38]	41 [1.6]

Measuring ranges from 100 bar [1,500 psi] to 4,000 bar [60,000 psi]

Process connections for model UPT-21

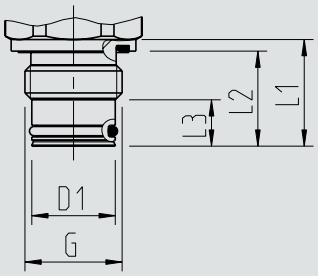

G	L1	L2	L3	D1
G ½ B	23 [0.9]	20.5 [0.81]	10 [0.4]	18 [0.71]

Hexagon dimension: 12 mm [0.47 in]
Spanner width: 27 mm [1.06 in]

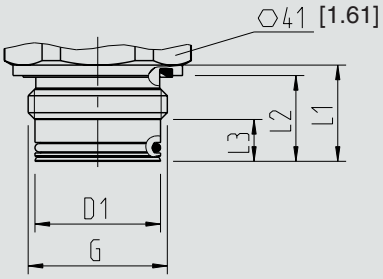

G	L1	L2	L3	D1
G 1 B	23 [0.9]	20.5 [0.81]	10 [0.4]	30 [1.18]

Hexagon dimension: 13 mm [0.51 in]

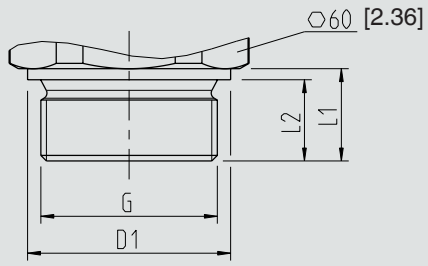

G	L1	L2	D1
G 1 ½ B	25 [0.99]	22 [0.87]	55 [2.17]

Hygienic

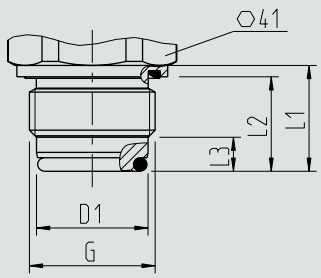

G	L1	L2	L3	D1
G 1 B	28 [1.10]	25 [0.98]	9 [0.35]	29.5 [1.16]

Hygienic

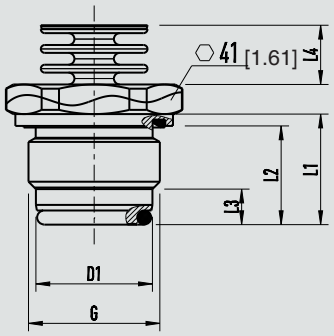

G	L1	L2	L3	L4	D1
G 1 B	28 [1.10]	25 [0.98]	9 [0.35]	15.5 [0.61]	29.5 [1.16]

Clamp connection (clamp)

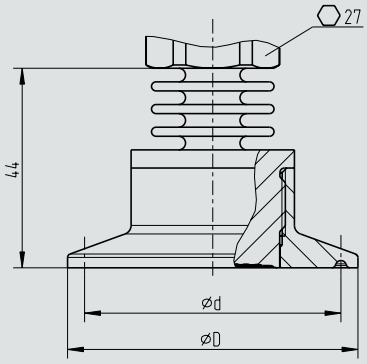

		ØD	Ød
DIN 32676 TRI-CLAMP® 1)	DN 1 ½	50.5 [1.99]	43.5 [1.71]
	DN 2	64 [2.52]	56.6 [2.23]
	DN 40	50.5 [1.99]	43.5 [1.71]
	DN 50	64 [2.52]	56.6 [2.23]

Hexagon height: 12.5 mm [0.49 in]
1) Process connections per ASME BPE

Grooved union nut DIN 11851

with conical coupling, for pipes per DIN 11850

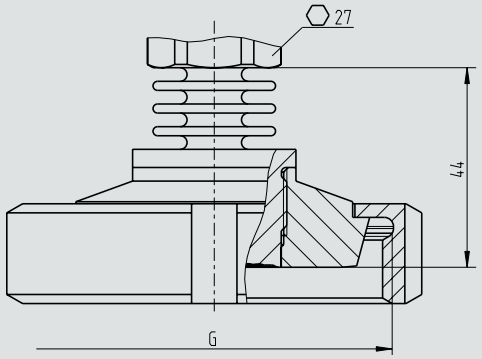

		G	Ød$_3$
DIN 11851	DN 25	Rd 52 x 1/6	44 [1.73]
	DN 50	Rd 78 x 1/6	61 [2.40]

Hexagon height: 12.5 mm [0.49 in]

For a 3-A-compliant connection of process connections with milk thread fittings per DIN 11851, profile sealings from SKS Komponenten BV or Kieselmann GmbH have to be used.

VARINLINE ®

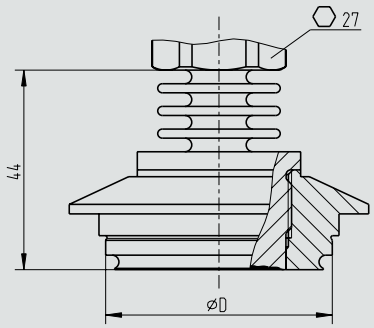

		ØD
VARINLINE®	Form F	50 [1.97]
	Form N	68 [2.68]

Hexagon height: 12.5 mm [0.49 in]

NEUMO BioConnect®
Flange form V

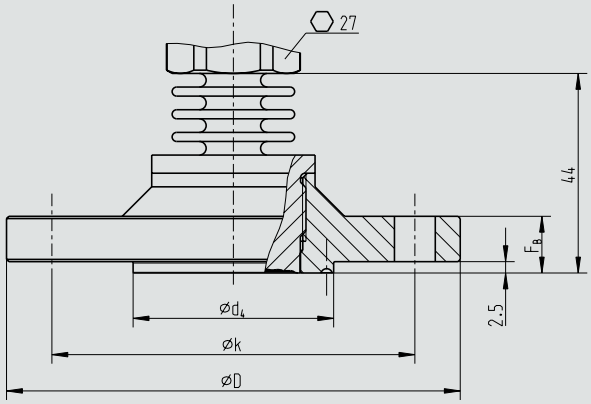

		Ød2	Ød4	ØD	Øk	F_B
BioConnect®	DN 40	4 x 9 [0.16 x 0.35]	44.2 [1.74]	100 [3.94]	80 [3.15]	10 [0.39]

Hexagon height: 12.5 mm [0.49 in]

DRD retainer flange

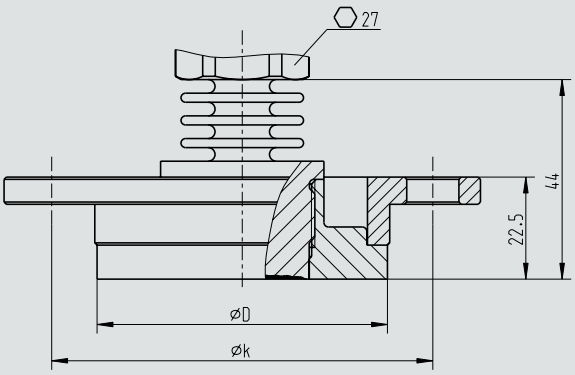

		ØD	Øk
DRD retainer flange	PN 40	64 [2.52]	84 [3.31]

Hexagon height: 12.5 mm [0.49 in]

Electropolished wetted surfaces for sanitary applications:
- Unpolished surface Ra ≤ 0.5 µm
- Polished surface Ra ≤ 0.38 µm

Case dimensions in mm

Plastic case, models UPT-20 and UPT-21

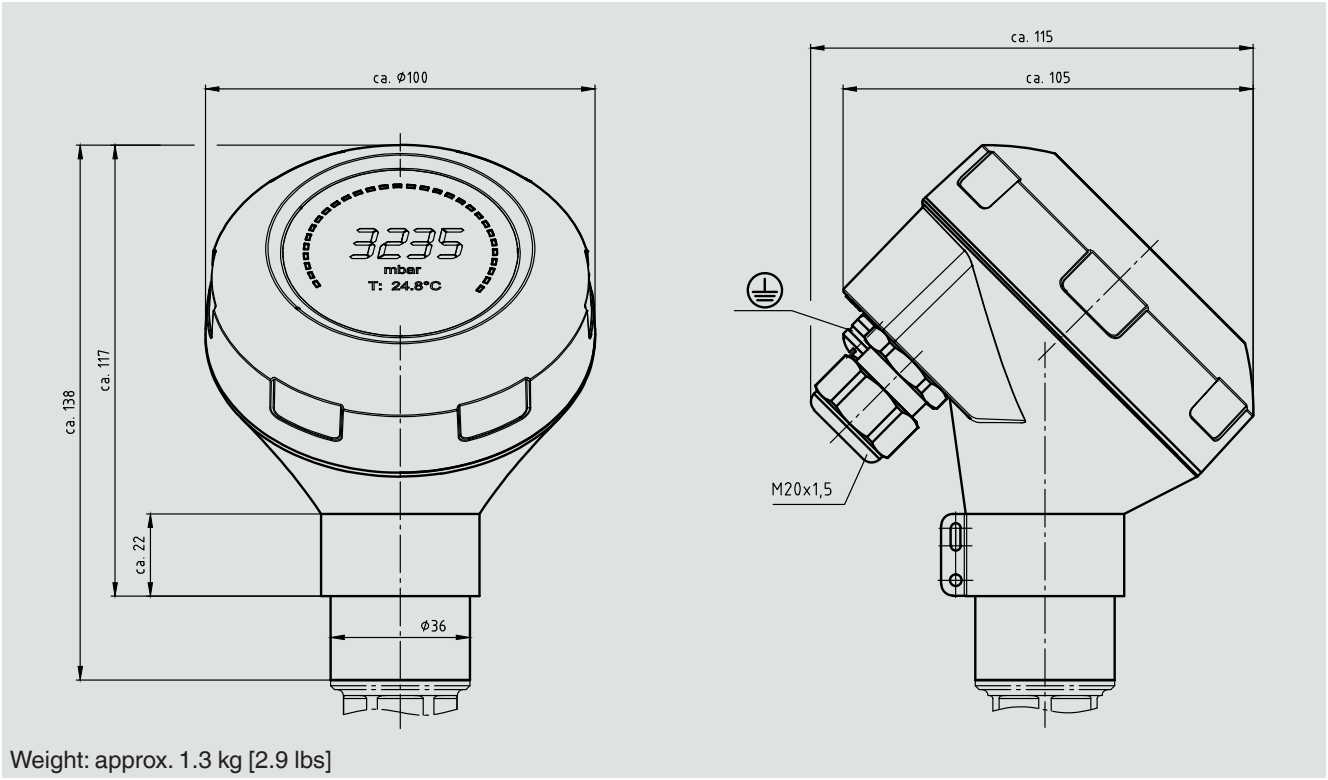

Weight: approx. 1.3 kg [2.9 lbs]

Stainless steel case and hygienic M20 x 1.5 cable gland, models UPT-20 and UPT-21

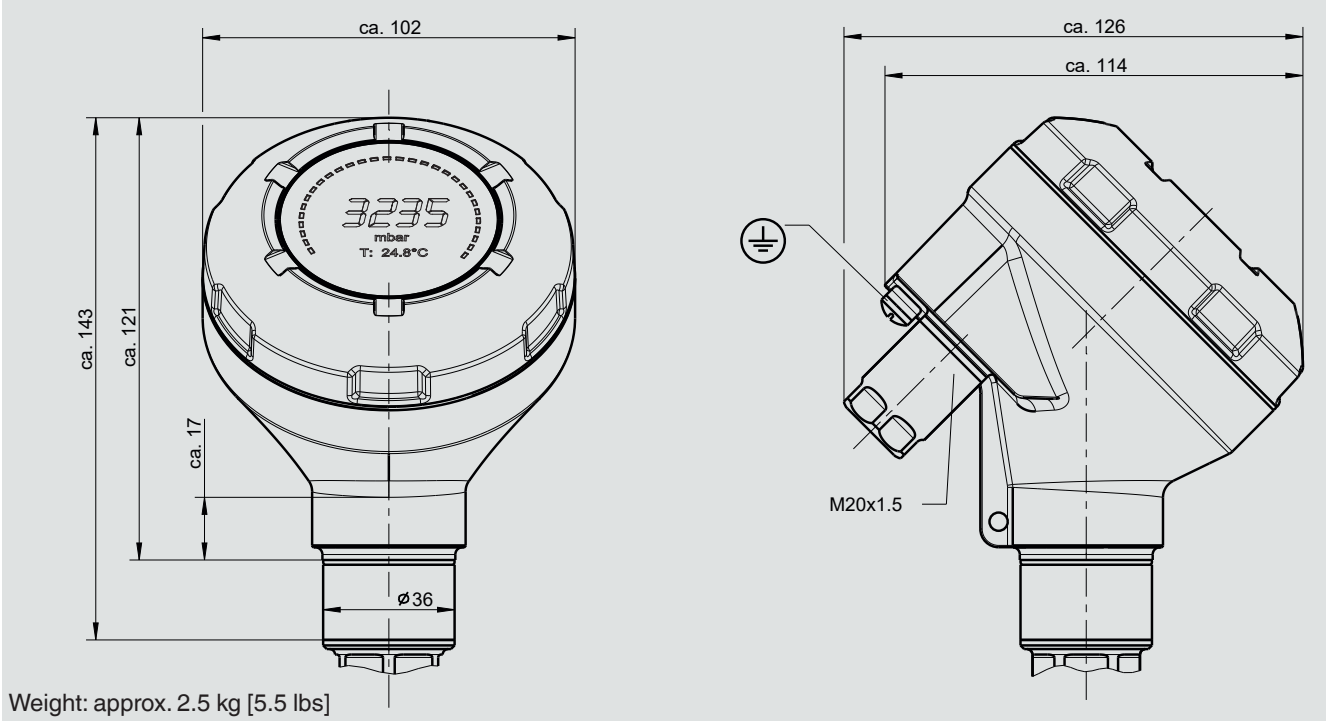

Weight: approx. 2.5 kg [5.5 lbs]

User interface DTM

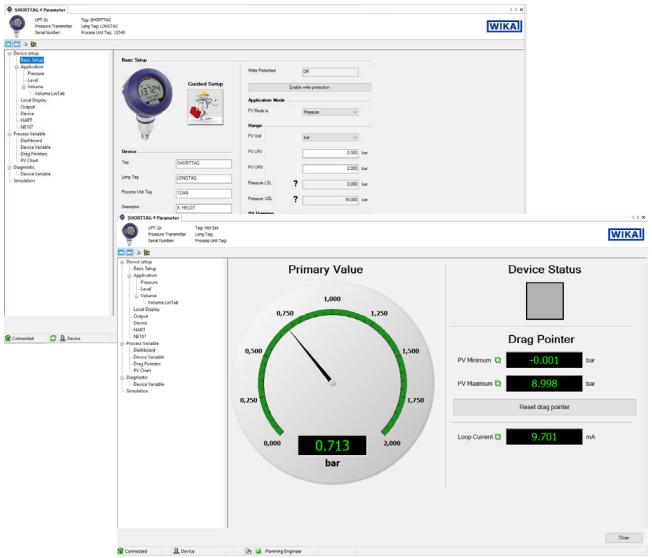

For HART® output signals, a DTM is available in accordance with the FDT standard. The DTM provides a self-explanatory and clear user interface for all setup and control processes of the transmitter. For testing purposes, it is also possible to simulate process values and archive the parameter data. Recording of the measured values is available for diagnostic purposes.

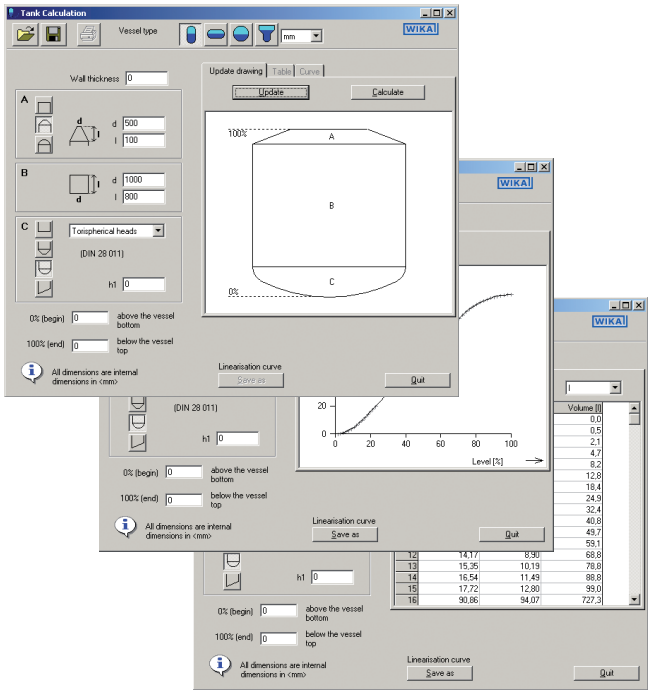

Tank volume calculation

The additional tank volume calculation of the DTM function can be used to reproduce any optional tank geometry. The corresponding linearisation table is generated automatically. The linearisation table can be transferred directly to the transmitter.

Accessories

Description		Order number
	Display module, model DIH52-F 5-digit display, 20-segment bar graph, without separate power supply, with additional HART® functionality. Automatic adjustment of measuring range and span. Secondary-master functionality: Setting the measuring range and unit of the connected transmitter using HART® standard commands possible. Optional: Explosion protection per ATEX	On request
	HART® modem for USB interface, specifically designed for use with notebooks (model 010031)	11025166
	HART® modem for RS-232 interface (model 010001)	7957522
	HART® modem for Bluetooth interface Ex ia IIC (model 010041)	11364254
	PowerXpress HART® modem, with optional power supply (model 010031P)	14133234
	Welding socket	
	For G ½ flush process connection	1192299
	For G 1 flush process connection	1192264
	For G 1 ½ flush process connection	2158982
	For G 1 hygienic flush process connection	14070973
	Instrument mounting bracket for wall or pipe mounting, stainless steel Weight: approx. 0.4 kg [0.9 lbs]	14058660
	Overvoltage protection for transmitters, 4 ... 20 mA, M20 x 1.5, series connection	14002489
	Display and operating unit, model DI-PT-U The display and operating unit can be attached in 90° steps. The display and operating unit features a main display and an additional display. The main display shows the output signal. The additional display shows different values, at the same time as the main display - these values can be selected by the user. The process pressure transmitter can be configured through the display and operating unit. Only this display may be used for installation into the process transmitter.	14090181
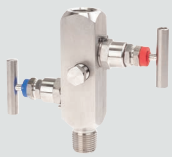	Block-and-bleed valve, model IV20, IV21 See data sheet AC 09.19	
	Hygienic cable gland M20 x 1.5 Cable diameter: 6 ... 12 mm [0.24 ... 0.47 in]	11348691

Ordering information

Model / Explosion protection / Case version / Digital display / Output signal / Electrical connection / Measuring range / Process connection / Sealing / Wetted parts / Accuracy / Certificates / Scaling

© 04/2014 WIKA Alexander Wiegand SE & Co. KG, all rights reserved.
The specifications given in this document represent the state of engineering at the time of publishing.
We reserve the right to make modifications to the specifications and materials.

WIKA Alexander Wiegand SE & Co. KG
Alexander-Wiegand-Straße 30
63911 Klingenberg/Germany
Tel. +49 9372 132-0
Fax +49 9372 132-406
info@wika.de
www.wika.de