EVC508

Y connection cable

YDOAH032MSS00,6H03STGH040MSS

Please see the technical note under "Downloads"

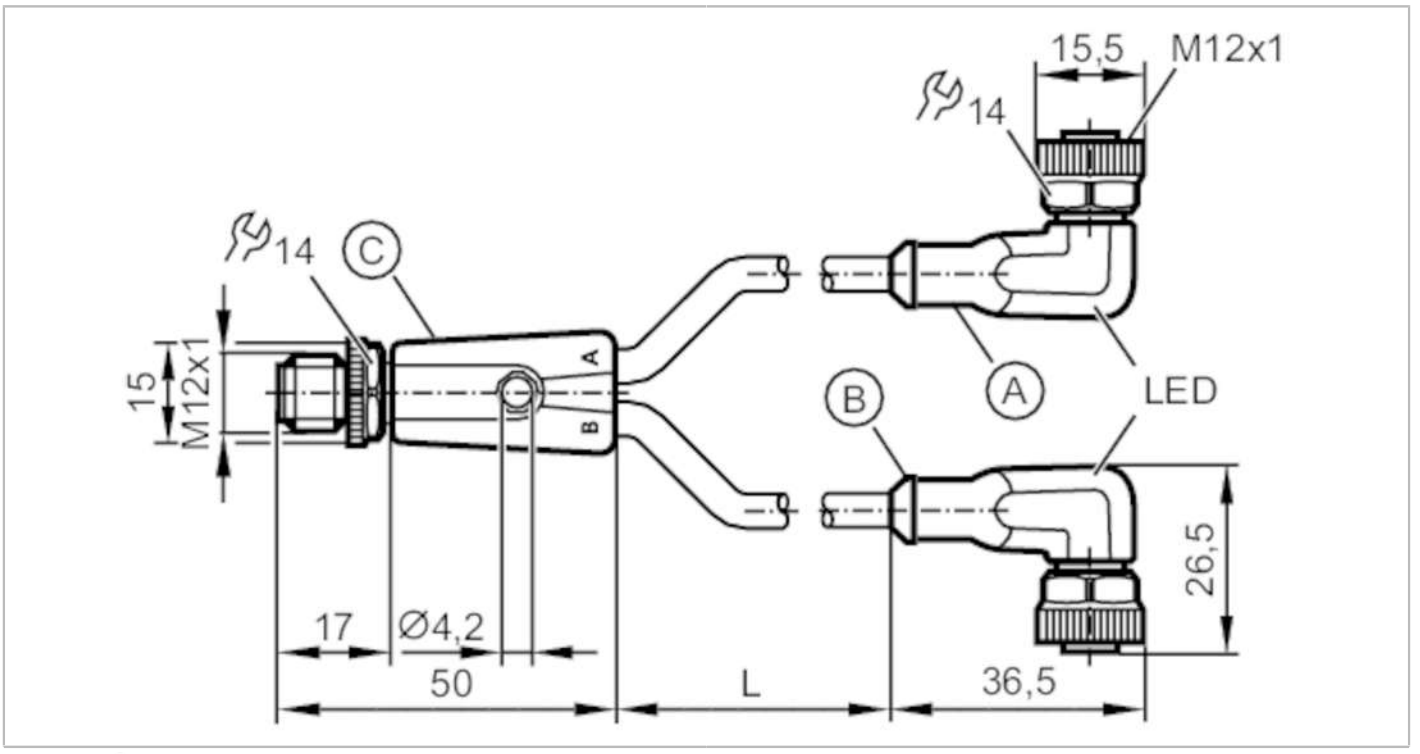

Application		
Special feature		Free from silicone; Halogen-free; Gold-plated contacts; Drag chain suitability
Free from silicone		yes
Electrical data		
Operating voltage	[V]	10...36 DC
Protection class		II
Max. current load total	[A]	4
Outputs		
Electrical design		PNP
Operating conditions		
Ambient temperature	[°C]	-25...90
Note on ambient temperature		cULus: ...75
Ambient temperature (moving)	[°C]	-25...90
Note on ambient temperature (moving)		cULus: ...75
Protection		IP 65; IP 67; IP 68; IP 69K
Mechanical data		
Weight	[g]	80.8
Moulded-body material		TPU
Material nut		brass, nickel-plated
Sealing material		FKM

EVC508

Y connection cable

YDOAH032MSS00,6H03STGH040MSS

Number of ports splitter box	2	
Drag chain suitability	yes	
Drag chain suitability	bending radius for flexible use	min. 10 x cable diameter
	travel speed	max. 3.3 m/s for a horizontal travel length of 5 m and max. acceleration of 5 m/s²
	bending cycles	> 5 Mio.
	torsional strain	± 180 °/m

Displays / operating elements

Display	switching status	1 x LED, yellow
	operation	1 x LED, green

Remarks

Notes	Please see the technical note under "Downloads"
Pack quantity	1 pcs.

Electrical connection

Cable: 0.6 m, PUR, Halogen-free, black, Ø 4.3 mm; 3 x 0.34 mm² (42 x Ø 0.1 mm)

Electrical connection - plug

Connector: 1 x M12, straight; coding: A; Moulded body: TPU, orange; Locking: brass, nickel-plated; Contacts: gold-plated;

Tightening torque: 0.6...1.5 Nm



EVC508

Y connection cable

YDOAH032MSS00,6H03STGH040MSS

Electrical connection

Connection

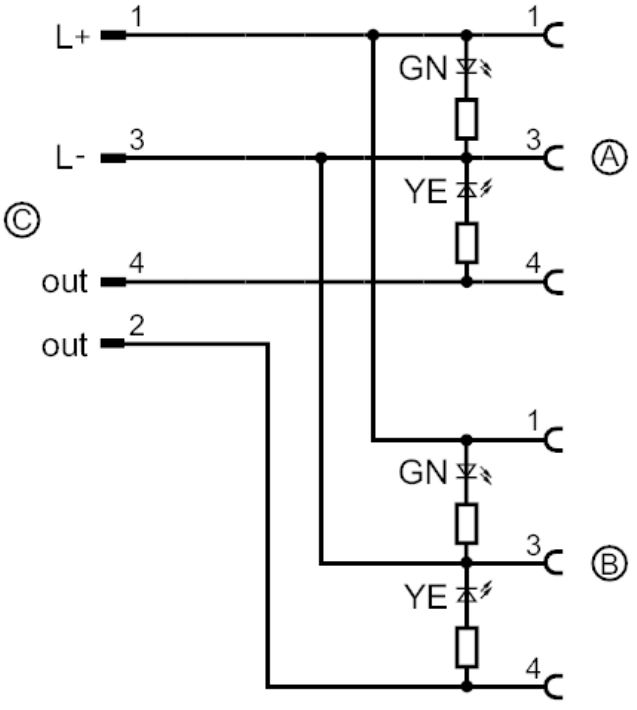

Electrical connection - socket

Connector: 2 x M12, angled; coding: A; Moulded body: TPU, black transparent; Locking: brass, nickel-plated; Sealing: FKM; Contacts: gold-plated; Tightening torque: 0.6...1.5 Nm

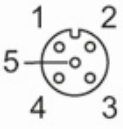

EVC508

Y connection cable

YDOAH032MSS00,6H03STGH040MSS

Diagrams and graphs

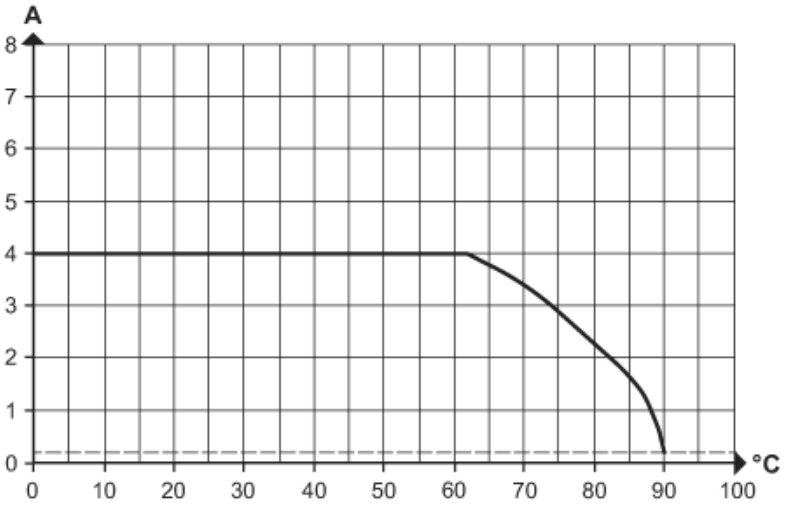

Derating Imax * 0.8 DIN EN 60512-5-2

X Ambient temperature [°C]

Y Current [A]