Reservoir, Series AS5-CLS/ -CLP/ -CLC

2024-03-20

R412009338

Series AS5

Qn = 14500 l/min



Technical data

Industry	Industrial
Parts	Reservoir
Reservoir	reservoir, polycarbonate, with PA protective guard
Filter reservoir volume	87 cm³
Condensate drain	semi-automatic, open without pressure
Max. working pressure	16 bar
Min. ambient temperature	-10 °C
Max. ambient temperature	50 °C
Min. medium temperature	-10 °C
Max. medium temperature	50 °C
Medium	Compressed air
Weight	0.086 kg

Material

Material reservoir	Polycarbonate
Material protective guard	Polyamide
Seal material	Acrylonitrile butadiene rubber
Part No.	R412009338

Technical information

The pressure dew point must be at least 15 °C less than ambient and medium temperature and may not exceed 3 °C.

The oil content of compressed air must remain constant during the life cycle.

Use only the approved oils from AVENTICS. Further information can be found in the “Technical information” document (available in https://www.emerson.com/en-us/support).

Dimensions

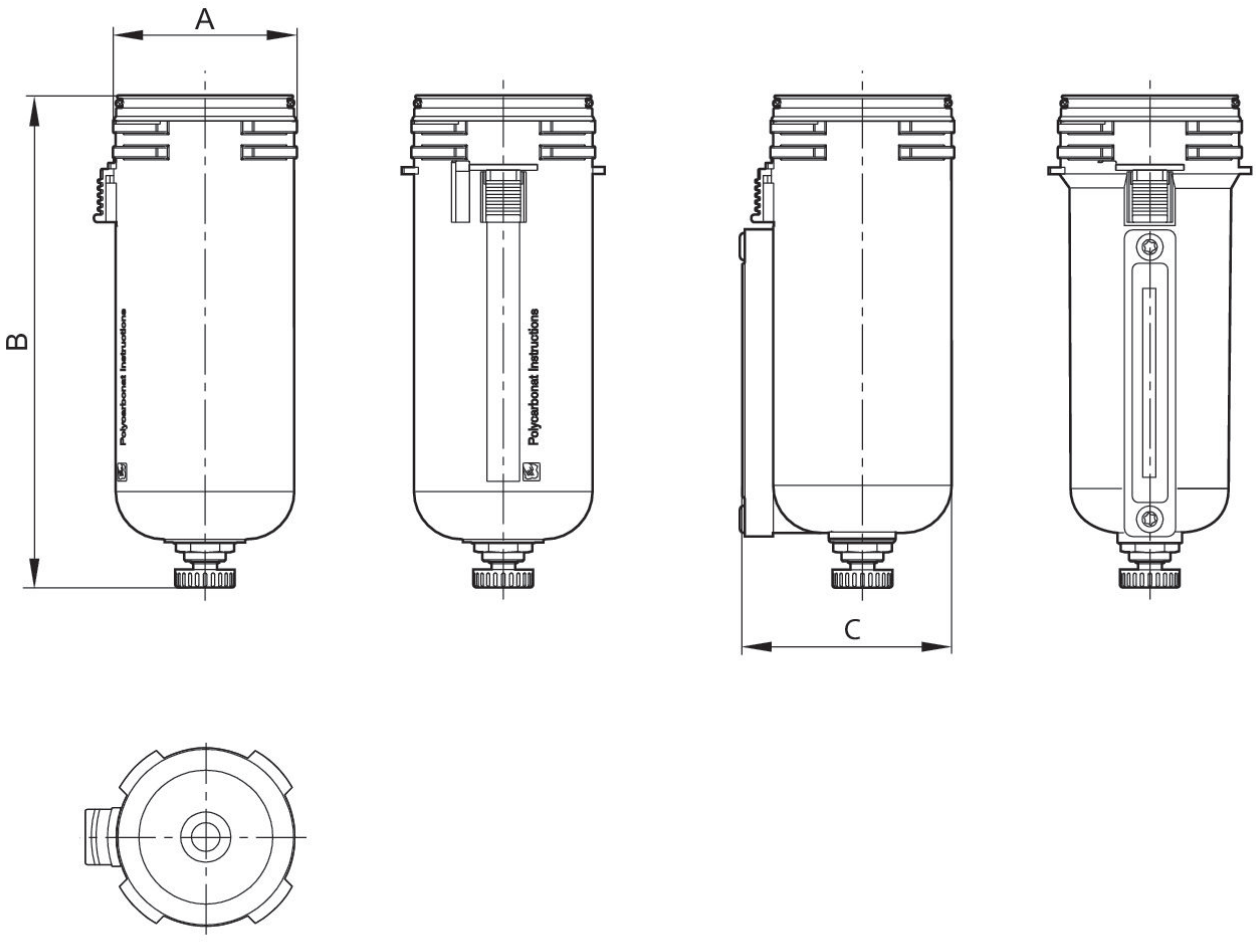

Dimensions in mm

Part No.	A	B	C
R412009338	60	165.3	64.7

Reservoir, Series AS5-CLS/ -CLP/ -CLC

2024-03-20

R412009338

Part No.	A	B	C
R412009344	60	165.3	64.7