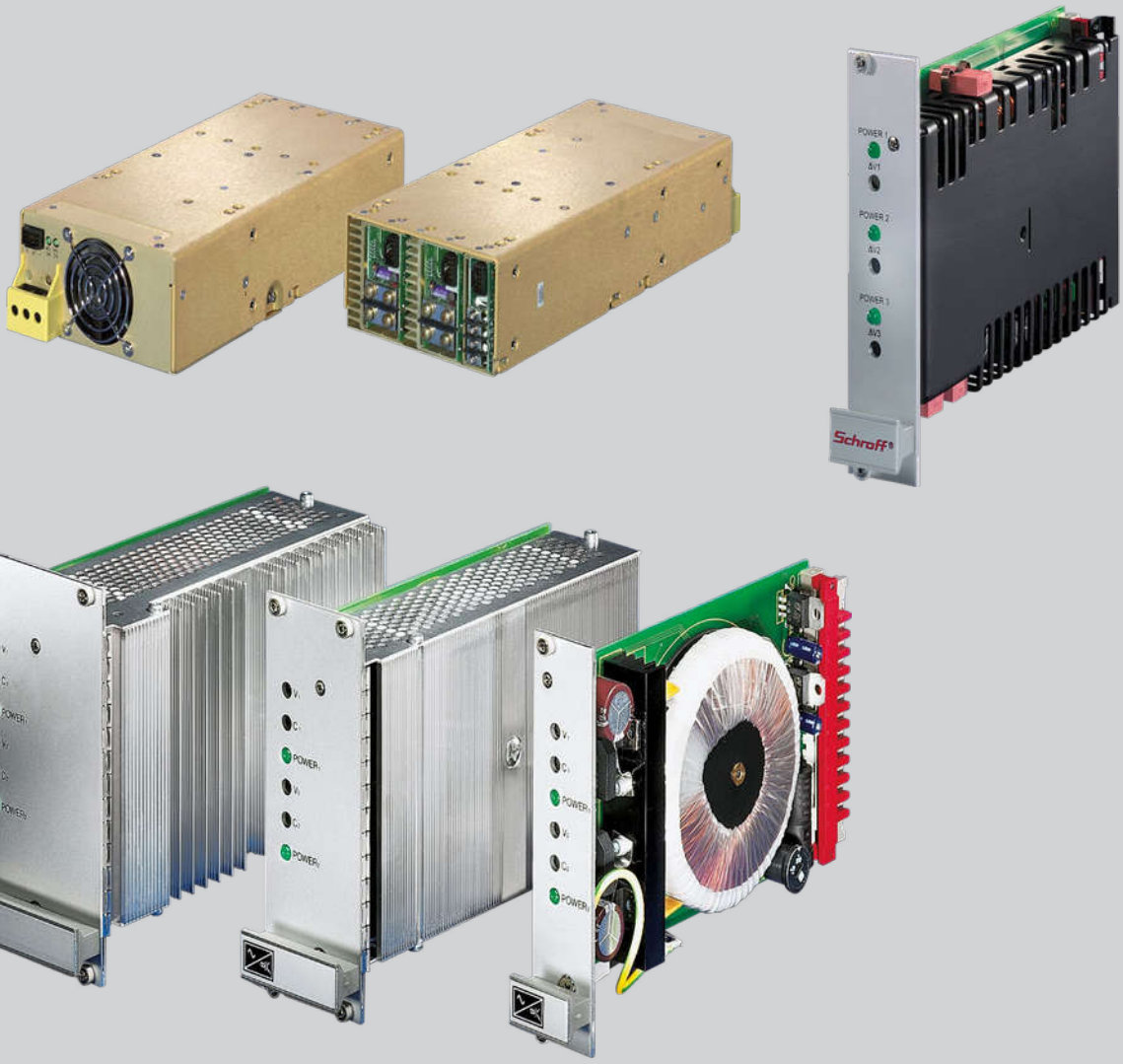

CONNECT AND PROTECT

Power Supply Systems

nVent

SCHROFF

Power supplies – Overview

OVERVIEW

MAIN KATALOG

Cabinets 1

Wall mounted cases 2

Accessories for cabinets and wall mounted cases . . 3

Climate control . . 4

Electronics cases 5

Subracks/ 19" chassis 6

Front panels, plug-in units 7

Systems 8

Power supply units 9

Backplanes 10

Connectors, front panel component system 11

Appendix 12



19" AC/DC SWITCH-MODE PSUS

- Compact PSUs with high efficiency level

19" AC/DC LINEAR REGULATORS

- Very low interference, optimised for medical applications





19" DC/DC SWITCH-MODE PSUS

- Large DC input voltage range and high performance

36106011 (11302001 11399005 11303001 11300001 11301001)

Power supplies – Overview



PSUS FOR MICROTCA APPLICATIONS

- Plug-in PSUs in double full-size format with and without management



PSUS FOR VMEBUS APPLICATIONS

- AC/DC and DC/DC switch-mode PSUs in 19" or open frame design





PSUS FOR COMPACTPCI AND VME64X APPLICATIONS

- AC/DC and DC/DC switch-mode PSUs in 19" or open frame design

36106012 (11311001 11309004 11312001 11301002 11406001 11408002 11302005)

Overview 9.0

19" AC/DC switch-mode PSUs

AC/DC regulators

Single, 42 W 9.2
Single, 50 W 9.3
Single, 100 W . . . 9.4
Single, adjustable, 100 W 9.5
Single, 180 W . . . 9.6
Dual, 100 W 9.7
Triple, 100 W 9.8
Triple, 130 W 9.9

AC/DC linear regulators

Single, 8 - 60 W . 9.10
Dual, 10 - 58 W . . 9.11
Triple, 7 - 39 W . . 9.12

DC/DC switch-mode PSUs

Single, 100 W . . . 9.13
Dual, 100 W 9.14
Triple, 100 W 9.15

Accessories

Z-rail, 4 HP 9.16
Connector H 15 F 9.16
Keying/coding . . 9.17
Wall/horizontal rail mounting . . . 9.17

PSUs for MicroTCA

MTCA double, with management . . . 9.18
MTCA double, without management . . . 9.19

PSUs for VMEbus

19", AC/DC, triple, 150/224 W 9.20
Open frame, AC/DC, triple, 444 ... 800 W 9.21

PSUs for CompactPCI, CompactPCI Serial, and VME64x

CPCI Serial, 19", AC/DC, 3 U, 300 W 9.23
19" AC/DC, 3/6 U, 250/500 W 9.23
AC/DC open frame, triple, 300/600 W 9.25
19" DC/DC, 3/6 U, 250/500 W 9.27

Power supplies–19" AC/DC switch-mode PSUs

SLIMPOWER 42 W, SINGLE



11302001

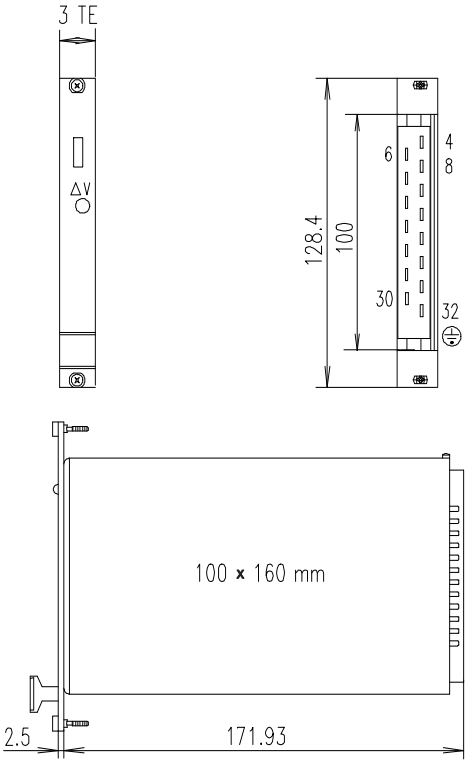

11302054

- Width only 3 HP
- Wide input voltage range
  85 ... 254 VAC and 120 ... 360 VDC
- Single output voltage with low interferences
  (low ripple < 10 mV_{PP})
- Integrated decoupling diode for redundancy operation
  (can be activated)
- Passive Current Share Bus
- Signalling: Output voltage OK

CE

DELIVERY COMPRISES

Qty	Description
1	19"-compatible power supply unit height 3 U width 3 HP depth 171.93 mm (160 mm board depth) connector H 15 M

ORDER INFORMATION

Voltage V	Current A	Power W	Description	Part no.
5	6	30	SLE 105	**13100-136**
12	3.5	42	SLE 112	13100-137
15	2.8	42	SLE 115	**13100-138**
24	1.7	41	SLE 124	13100-139
Front panel 3 HP, Al, front anodised, rear iridescent green chromated, with vertical grooves for EMC gaskets, incl. assembly kit, 1 piece				**21006-959**
EMC gaskets (stainless steel) 3 U, 97 mm, stainless steel, two pieces necessary per front panel, PU 10 pieces				**21101-705**
Connector H 15 F Mating connector (female) for wiring inputs/ outputs (6.3 mm FASTON), 1 piece				**69001-733**

Note

- **Please order front panel separately**
- Output data at T_A = 0 ... 50 °C
- Further accessories see page 9.16

TE = HP

Connector pin-out

Pin	Connection
4	Output + V_1
6	Output + V_1
8	Sense line + V_1
10	Sense line 0 V_1
12	Output 0 V_1
14	Output 0 V_1
16	–
18	–
20	–
22	–
24	Output OK
26	–
28	L
30	N
32	PE ⏚

Power supplies–19" AC/DC switch-mode PSUs

Maxpower 50 W, single



11317001

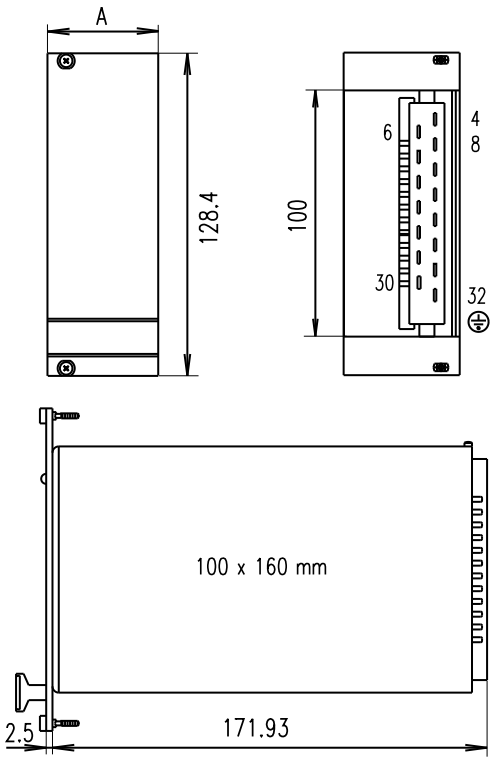

DIJM0084

- Wide input voltage range 90 to 253 V_{AC} and 130 to 340 V_{DC}
- 1 output voltage
- Signaling: Output voltage OK
- Includes installed front panel
- Efficiency up to 88%
- Standby (no load) power output < 1.5 W
- Redundancy operation
  - With hot swap function
  - With active OR decoupling
  - 24 V, 48 V version with decoupling diode - hot swap
  - No base load required
  - Automatic load distribution depending on power supply unit (PSU) temperature
  - No current share line between the power supplies necessary
  - Quasi-resonant topology reduces emissions that affect electromagnetic compatibility (EMC)

CE

DELIVERY INCLUDES

Qty.	Description
1	19" compatible power supply with installed front plate height 3 U width A: 6 HP depth 171.93 mm (160 mm board depth) H15M connector coding strip (fitted) EMC seal (included)

ORDER INFORMATION

Voltage V	Current A	Power W	Description	Part no.
5	10	50 1)	MAX50-105	**13100-170**
12	4.2	51	MAX50-112	**13100-171**
15	3.4	51	MAX50-115	**13100-172**
24	2.1	51	MAX50-124	**13100-173**
48	1.1	53	MAX50-148	**13100-174**
Accessories				
Connector H 15 F FASTON connection, 1 piece				**69001-733**
Coding PU (1 keying/coding strip, 2 pieces keying/coding pins)				**60800-123**

Note

- Output data at TU = -25 ... 50 °C
- Customized front panels available at www.frontplattenexpress.eu

Connector pin-out

Pin	Connection
4	Output + V_1
6	Output + V_1
8	Sense line + V_1
10	Sense line 0V V_1
12	Output 0V V_1
14	Output 0V V_1
16	Parallel operation
18	-
20	Test
22	-
24	Output OK
26	-
28	L
30	N
32	PE ⏚

Part number in bold face type: ready for shipping within 2 working days
Part number in normal type: ready for shipping within 10 working days

Power supplies–19" AC/DC switch-mode PSUs

MAXPOWER 100 W, SINGLE



11399005

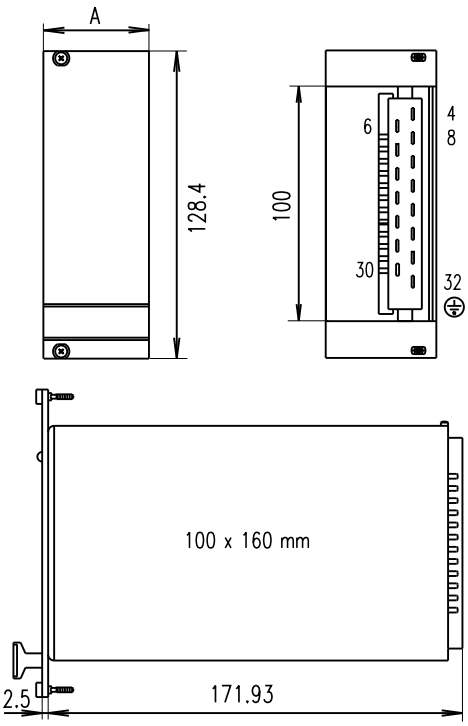

DIJM0084

- Wide input voltage range 90 ... 254 V_{AC} and 100 ... 360 V_{DC} with active power factor correction (PFC)
- High power density
- Single output voltage
- Integrated decoupling diode for redundancy operation
- Active current share bus (CSB)
- Signalling: Output voltage OK

DELIVERY COMPRISES

Qty	Description
1	19" compatible power supply height 3 U width A: 6 HP depth 171.93 mm (160 mm board depth) connector H 15 M coding strip (fitted)

ORDER INFORMATION

Voltage V	Current A	Power W	Description	Part no.
5	16	80	MAX 105	**13100-102**
12	8.3	100	MAX 112	13100-103
15	6.6	99	MAX 115	13100-104
24	4.2	101	MAX 124	**13100-105**
Front panel 6 HP, Al, front anodised, rear iridescent green chromated, with vertical grooves for EMC gaskets, incl. assembly kit, 1 piece				**21006-943**
EMC gaskets (stainless steel) 3 U, 97 mm, stainless steel, two pieces necessary per front panel, PU 10 pieces				**21101-705**
Connector H 15 F Mating connector (female) for wiring inputs/outputs (6.3 mm FASTON), 1 piece				**69001-733**
Coding PU (1 keying/coding strip, 2 pieces keying/coding pins)				**60800-123**

Note

- **Please order front panel separately**
- Output data for mains voltage > 190 V_{AC}, T_A = 0 ... 50 °C
- Further accessories see page 9.16

Connector pin-out

Pin	Connection
4	Output + V_1
6	Output + V_1
8	Sense line + V_1
10	Sense line 0 V_1
12	Output 0 V_1
14	Output 0 V_1
16	–
18	–
20	–
22	CSB
24	Output OK
26	–
28	L
30	N
32	PE ⏚

MAXPOWER 100 W, ADJUSTABLE, SINGLE



11303001

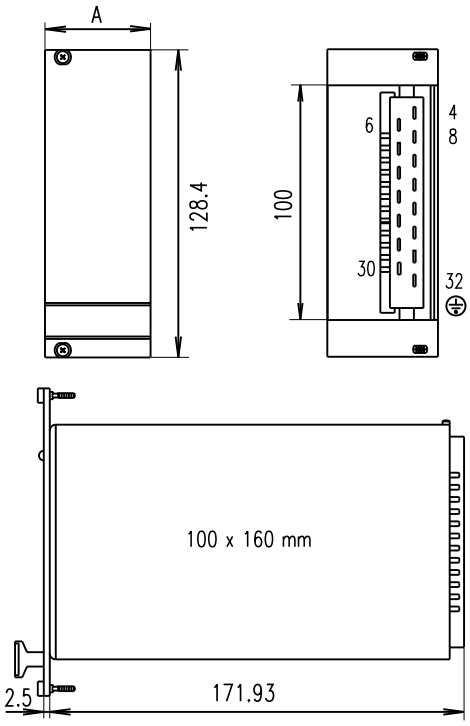

DIJM0084

- Wide adjustment range of output voltage
- Wide input voltage range 90 ... 264 V_{AC} and 100 ... 360 V_{DC} with active Power Factor Correction (PFC)
- Single output voltage
- Integrated decoupling diode for redundancy operation
- Active Current Share Bus (CSB)
- Signalling: Output voltage OK

CE

DELIVERY COMPRISES

Qty	Description
1	19" compatible power supply height 3 U width A: 6 HP depth 171.93 mm (160 mm board depth), output voltage factory preset to 12 V / 24 V Connector H 15 M Coding strip (fitted)

ORDER INFORMATION

Voltage V	Current A	Power W	Description	Part no.
4.5–17	5.9	100	MAX LR	**13100-133**
16–30	3.4	102	MAX UR	13100-134
Front panel 6 HP, Al, front anodised, rear iridescent green chromated, with vertical grooves for EMC gaskets, incl. assembly kit, 1 piece				**21006-954**
EMC gaskets (stainless steel) 3 U, 97 mm, stainless steel, two pieces necessary per front panel, PU 10 pieces				**21101-705**
Connector H 15 F Mating connector (female) for wiring inputs/ outputs (6.3 mm FASTON), 1 piece				**69001-733**
Coding PU (1 keying/coding strip, 2 pieces keying/coding pins)				**60800-123**

Note

- **Please order front panel separately**
- Output data for mains voltage > 190 V_{AC}, T_A = 0 ... 50 °C
- Further accessories see page 9.16

Connector pin-out

Pin	Connection
4	Output + V_1
6	Output + V_1
8	Sense line + V_1
10	Sense line 0 V_1
12	Output 0 V_1
14	Output 0 V_1
16	–
18	–
20	–
22	CSB
24	Output OK
26	–
28	L
30	N
32	PE ⏚

Part number in bold face type: ready for shipping within 2 working days
Part number in normal type: ready for shipping within 10 working days

Power supplies–19" AC/DC switch-mode PSUs

MAXPOWER 180 W, SINGLE



11308005

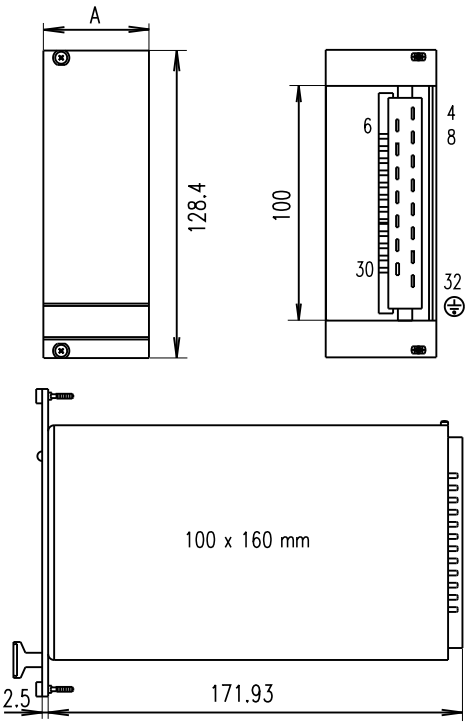

DIJM0084

- Wide input voltage range 90 ... 254 V_{AC} and 100 ... 360 V_{DC} with active Power Factor Correction (PFC)
- Single output voltage
- Integrated active decoupling for redundancy operation
- Active Current Share Bus (CSB)
- Signalling: Output voltage OK
- Efficiency up to 87 %

CE

DELIVERY COMPRISES

Qty	Description
1	19" compatible power supply height 3 U width A: 8 HP depth 171.93 mm (160 mm board depth) connector H 15 M coding strip (fitted)

ORDER INFORMATION

Voltage V	Current A	Power W	Description	Part no.
5	30	150	MAX 180-105	13100-150
12	13	156	MAX 180-112	13100-151
15	11	165	MAX 180-115	13100-152
24	7	168	MAX 180-124	**13100-153**
Front panel 8 HP, Al extrusion, front anodised, rear iridescent green chromated, shielded with fixed textile gasket, incl. assembly kit, 1 piece				**31006-677**
Connector H 15 F Mating connector (female) for wiring inputs/ outputs (6.3 mm FASTON), 1 piece				**69001-733**
Coding PU (1 keying/coding strip, 2 pieces keying/coding pins)				**60800-123**

Note

- **Please order front panel separately**
- Output data for mains voltage > 190 V_{AC}, T_A = 0 ... 50 °C
- Further accessories see page 9.16

Connector pin-out

Pin	Connection
4	Output + V_1
6	Output + V_1
8	Sense + V_1
10	Sense 0V V_1
12	Output 0V V_1
14	Output 0V V_1
16	Output + V_1
18	Output 0V V_1
20	Test
22	CSB
24	DC output OK
26	–
28	L
30	N
32	PE ⏚

Power supplies–19" AC/DC switch-mode PSUs

MAXPOWER 100 W, DUAL



11300010

- Wide input voltage range 90 ... 254 V_{AC} and 100 ... 360 V_{DC} with active power-factor correction (PFC)
- High power density
- 2 output voltages
- Efficiency up to 80%

DELIVERY COMPRISES

Qty	Description
1	19"-compatible power-supply unit height: 3 U width A: 8 HP depth 171.93 mm (160 mm board depth) connector H 15 M coding strip (fitted)

ORDER INFORMATION

Voltage V	Current A	Power W	Description	Part no.
V1: 5 V_2: 12	I_1: 9 I_2: 4	93	MAX 2512	13100-112
V1: 5 V_2: 24	I_1: 9 I_2: 2	93	MAX 2524	**13100-114**
V1: 12 V_2: -12	I_1: 4.2 I_2: 4.2	101	MAX 212	13100-115
V1: 15 V_2: -15	I_1: 3.4 I_2: 3.4	102	MAX 215	**13100-116**
Front panel 8 HP, Al, front anodised, rear iridescent green chromated, with vertical grooves for EMC gaskets, incl. assembly kit, 1 piece				**21006-945**
EMC gaskets (stainless steel) 3 U, 97 mm, stainless steel, two pieces necessary per front panel, PU 10 pieces				**21101-705**
Connector H 15 F Mating connector (female) for wiring inputs/outputs (6.3 mm FASTON), 1 piece				**69001-733**
Coding PU (1 keying/coding strip, 2 pieces keying/coding pins)				**60800-123**

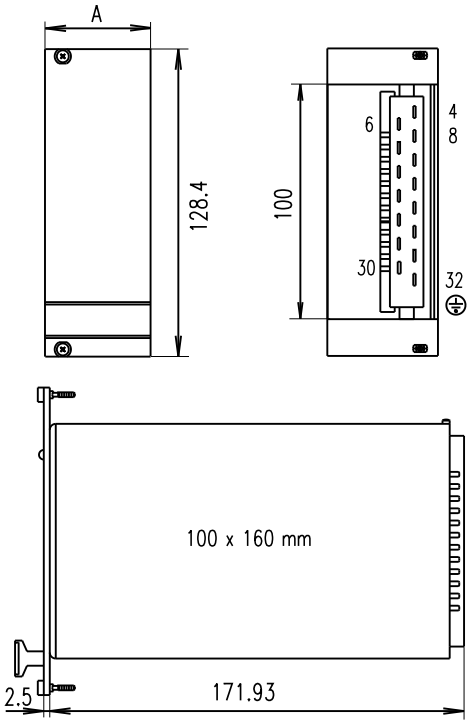

DIJM0084

Note

- **Please order front panel separately**
- Output data for mains voltage > 190 V_{AC}, T_A = 0 ... 50 °C
- Further accessories see page 9.16

Connector pin-out

Pin	Connection
4	–
6	–
8	–
10	–
12	–
14	–
16	Output + V_1
18	Output 0 V_1
20	Output + V_2
22	Output 0 V_2
24	–
26	–
28	L
30	N
32	PE ⏚

Part number in bold face type: ready for shipping within 2 working days
Part number in normal type: ready for shipping within 10 working days

Power supplies–19" AC/DC switch-mode PSUs

MAXPOWER 100 W, TRIPLE



11300011

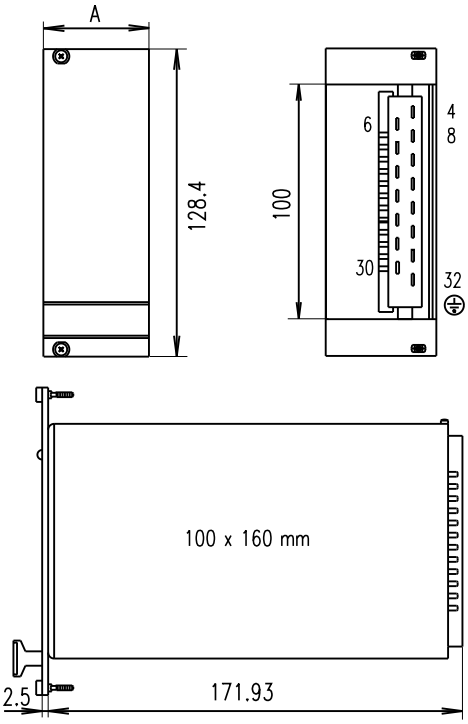

DIJM0084

- Wide input voltage range 90 ... 254 V_{AC} and 100 ... 360 V_{DC} with active power-factor correction (PFC)
- High power density
- 3 output voltages
- Signalling: Output voltage OK

DELIVERY COMPRISES

Qty	Description
1	19" compatible power supply height 3 U width A: 8 HP depth 171.93 mm (160 mm board depth) connector H 15 M coding strip (fitted)

ORDER INFORMATION

Voltage V	Current A	Power W	Description	Part no.
V1: 5 V_2: 12 V_3: -12	I_1: 8 I_2: 2.5 I_3: 2.5	100	MAX 312	13100-122
V1: 5 V_2: 15 V_3: -15	I_1: 8 I_2: 2 I_3: 2	100	MAX 315	13100-123
Front panel 8 HP, Al, front anodised, rear iridescent green chromated, with vertical grooves for EMC gaskets, incl. assembly kit, 1 piece				**21006-945**
EMC gaskets (stainless steel) 3 U, 97 mm, stainless steel, two pieces necessary per front panel, PU 10 pieces				**21101-705**
Connector H 15 F Mating connector (female) for wiring inputs/outputs (6.3 mm FASTON), 1 piece				**69001-733**
Coding PU (1 keying/coding strip, 2 pieces keying/coding pins)				**60800-123**

Note

- **Please order front panel separately**
- Output data for mains voltage > 190 V_{AC}, T_A = 0 ... 50 °C
- Further accessories see page 9.16

Connector pin-out

Pin	Connection
4	Output + V_1
6	Output + V_1
8	Sense line + V_1
10	Sense line 0V V_1
12	Output 0V V1,2
14	Output 0V V1,2
16	Output + V_2
18	Output 0V V1,2
20	Output 0V V_3
22	Output – V_3
24	Output OK
26	–
28	L
30	N
32	PE ⏚

MAXPOWER 130 W, TRIPLE



11399009

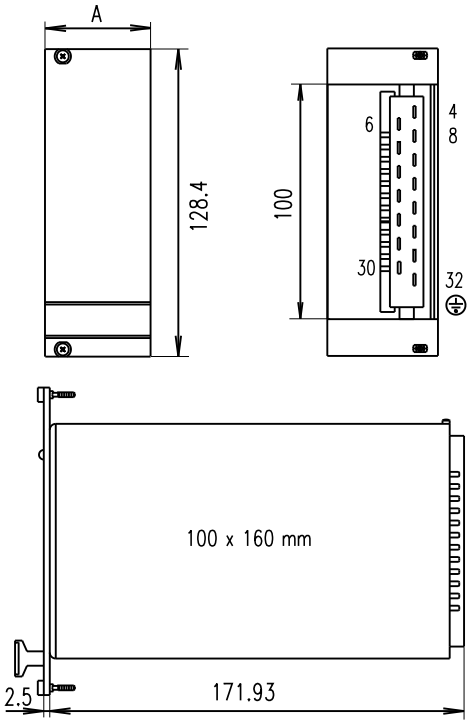

DIJM0084

- Wide input voltage range 90 ... 254 V_{AC} and 100 ... 360 V_{DC} with active Power Factor Correction (PFC)
- 3 output voltages
- Signalling: Output voltage OK

DELIVERY COMPRISES

Qty	Description
1	19" compatible power supply height 3 U width A: 12 HP depth 171.93 mm (160 mm board depth) connector H 15 M coding strip (fitted)

ORDER INFORMATION

Voltage V	Current A	Power W	Description	Part no.
V1: 5 V_2: 12 V_3: -12	I_1: 16 I_2: 2.8 I_3: 1.4	132	SEG 312	13100-078
V1: 5 V_2: 15 V_3: -15	I_1: 16 I_2: 2.2 I_3: 1.1	132	SEG 315	13100-079
Front panel 12 HP, Al, front anodised, rear iridescent green chromated, with vertical grooves for EMC gaskets, incl. assembly kit, 1 piece				**21006-946**
EMC gaskets (stainless steel) 3 U, 97 mm, stainless steel, two pieces necessary per front panel, PU 10 pieces				**21101-705**
Connector H 15 F Mating connector (female) for wiring inputs/ outputs (6.3 mm FASTON), 1 piece				**69001-733**
Coding PU (1 keying/coding strip, 2 pieces keying/coding pins)				**60800-123**

Note

- **Please order front panel separately**
- Output data for mains voltage > 190 V_{AC}, T_A = 0 ... 50 °C
- Further accessories see page 9.16

Connector pin-out

Pin	Connection
4	Output + V_1
6	Output + V_1
8	Sense + V_1
10	Sense 0V V_1
12	Output 0V V1,2,3
14	Output 0V V1,2,3
16	Output + V_2
18	Output 0V V1,2,3
20	Output 0V V1,2,3
22	Output – V_3
24	Output OK
26	–
28	L
30	N
32	PE ⏚

Part number in bold face type: ready for shipping within 2 working days
Part number in normal type: ready for shipping within 10 working days

Power supplies–19" AC/DC linear regulators

LINEAR REGULATORS, SINGLE



11397001

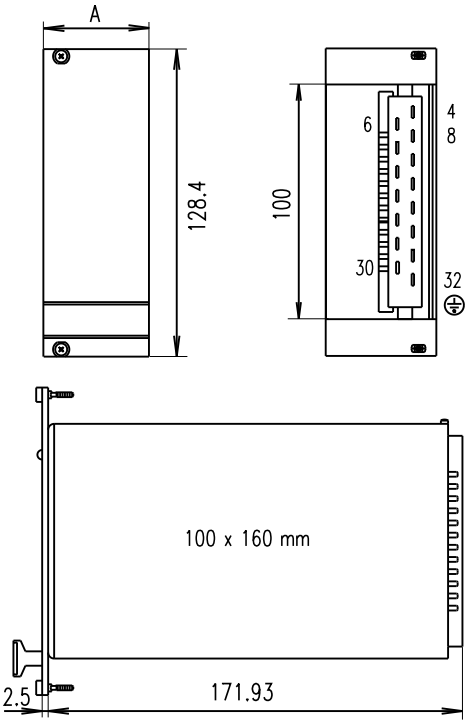

DIJM0084

Connector pin-out

Pin	PSK single	PSM, PSG single
4	Sense line + V_1	Sense line + V_1
6	Output + V	Output + V
8	Output + 0 V_1	Output +0 V_1
10	Sense line 0 V_1	Sense line 0 V_1
12	–	Optional: redundancy diode
14	–	External on/off
16	–	GND
18		V remote input + Vc
20	–	V-shunt + Vs
22	–	V-shunt – Vs
24	–	–
26	–	–
28	L	L
30	N	N
32	PE ⏚	PE ⏚

- Mains/line voltage 230 V_{AC} (can be switched to 115 V_{AC} with mains/line voltage conversion kit)
- High control accuracy, low residual ripple and low interference, suitable for medical applications (8 mm safety clearances)
- PSM, PSG
  - Output voltage can be remote controlled externally (1 ... 10 V)
  - Switching of control curve for sensitive loads (U/I - Fold Back)
  - Current measurement via shunt

CE **EN 60950 approved**

DELIVERY COMPRISES

Qty	Description
1	19" compatible power supply height 3 U width A: 6, 10, 14 HP depth 171.93 mm (160 mm deep boards) connector H 15 M (fitted) keying/coding peg (fitted)

ORDER INFORMATION

Voltage V	Current A	Power W	Width HP	Description	Part no.
5	1.5	8	6	PSK 105	**13105-001**
5	4	20	10	PSM 105	13105-006
5	6	30	14	PSG 105	**13105-011**
12	1.1	13	6	PSK 112	13105-002
12	2.8	31	10	PSM 112	**13105-007**
12	4.2	50	14	PSG 112	**13105-012**
15	1	15	6	PSK 115	**13105-003**
15	2.2	33	10	PSM 115	**13105-008**
15	3.5	53	14	PSG 115	**13105-013**
24	0.6	16	6	PSK 124	**13105-004**
24	1.5	36	10	PSM 124	**13105-009**
24	2.5	60	14	PSG 124	**13105-014**
Front panel for PSK 6 HP, 1 piece					**21005-475**
Front panel for PSM 10 HP, 1 piece					**21005-473**
Front panel for PSG 14 HP, 1 piece					**21005-474**
EMC gaskets (stainless steel) 3 U, 97 mm, stainless steel, two pieces necessary per front panel, PU 10 pieces					**21101-705**
Connector H 15 F Mating connector (female) for wiring inputs/ outputs (6.3 mm FASTON), 1 piece					**69001-733**
Coding PU (1 keying/coding strip, 2 pieces keying/coding pins)					**60800-123**
Mains voltage conversion kit 230 V to 115 V, 1 piece					**43105-999**

Note

- **Please order front panel separately** (Al, front anodised, rear iridescent green chromated, with vertical grooves for EMC gaskets, incl. assembly kit)
- PSK without case
- Output data at T_A = 0 ... 50 °C
- Further accessories see page 9.16

Power supplies–19" AC/DC linear regulators

LINEAR REGULATORS, DUAL



11300001

- Mains/line voltage 230 V_{AC} (can be switched to 115 V_{AC} with mains/line voltage conversion kit)
- 2 output voltages, galvanically separated
- High control accuracy, low residual ripple and very low interference
- Suited for medical applications (8 mm safety clearances)

CE **EN 60950 approved**

DELIVERY COMPRISES

Qty	Description
1	19" compatible power supply Height 3 U Width A: 6, 10, 14 HP Depth 171.93 mm (160 mm board depth) Connector H 15M Coding strip (fitted)

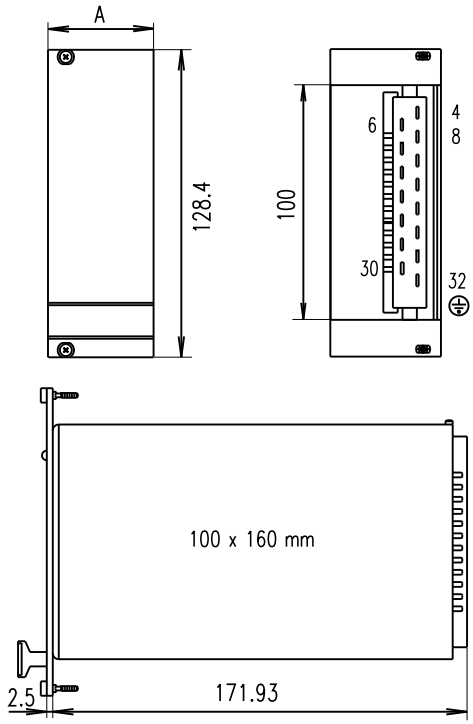

DIJM0084

Connector pin-out

Pin	Connection
4	Sense line + V_1
6	Output + V_1
8	Output 0 V_1
10	Sense line 0 V_1
12	Sense line + V_2
14	Output + V_2
16	Output 0 V_2
18	Sense line 0 V_2
20	–
22	–
24	–
26	–
28	L
30	N
32	PE ⏚

ORDER INFORMATION

Voltage V	Current A	Power W	Width HP	Description	Part no.
V1: 5 V_2: 5	I_1: 1.4 I_2: 1.4	14	10	PSM 205	**13105-021**
V1: 12 V_2: 12	I_1: 0.4 I_2: 0.4	10	6	PSK 212	13105-017
V1: 12 V_2: 12	I_1: 1 I_2: 1	24	10	PSM 212	13105-022
V1: 12 V_2: 12	I_1: 1.5 I_2: 1.5	36	14	PSG 212	**13105-027**
V1: 15 V_2: 15	I_1: 0.4 I_2: 0.4	12	6	PSK 215	**13105-018**
V1: 15 V_2: 15	I_1: 1 I_2: 1	30	10	PSM 215	13105-023
V1: 15 V_2: 15	I_1: 1.5 I_2: 1.5	45	14	PSG 215	**13105-028**
V1: 24 V_2: 24	I_1: 1.2 I_2: 1.2	58	14	PSG 224	**13105-029**
Front panel for PSK 6 HP, 1 piece					**21005-476**
Front panel for PSM 10 HP, 1 piece					**21005-477**
Front panel for PSG 14 HP, 1 piece					**21005-478**
EMC gaskets (stainless steel) 3 U, 97 mm, stainless steel, two pieces necessary per front panel, PU 10 pieces					**21101-705**
Connector H 15 F Mating connector (female) for wiring inputs/ outputs (6.3 mm FASTON), 1 piece					**69001-733**
Coding PU (1 keying/coding strip, 2 pieces keying/coding pins)					**60800-123**
Mains voltage conversion kit 230 V to 115 V, 1 piece					**43105-999**

Note

- **Please order front panel separately** (Al, front anodised, rear iridescent green chromated, with vertical grooves for EMC gaskets, incl. assembly kit)
- PSK without case
- Output data at T_A = 0 ... 50 °C
- Further accessories see page 9.16

Part number in bold face type: ready for shipping within 2 working days
Part number in normal type: ready for shipping within 10 working days

Power supplies–19" AC/DC linear regulators

LINEAR REGULATORS, TRIPLE



11300002

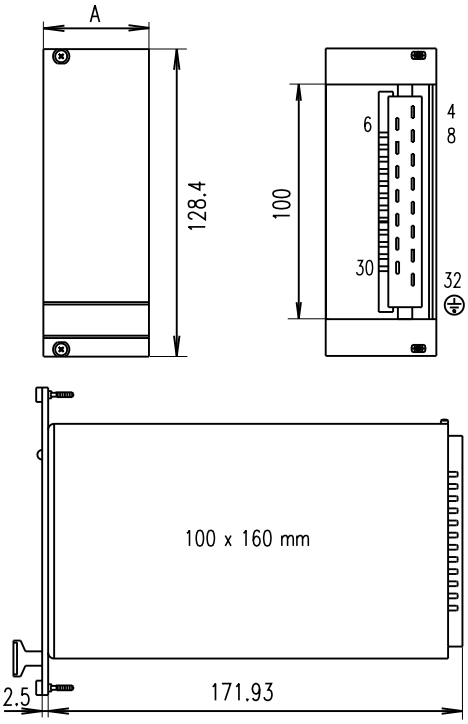

DIJM0084

- Mains/line voltage 230 V_{AC} (can be switched to 115 V_{AC} with mains/line voltage conversion kit)
- 3 output voltages, galvanically separated
- High control accuracy, low residual ripple and very low interference
- Suited for medical applications (8 mm safety clearances)

CE **EN 60950 approved**

DELIVERY COMPRISES

Qty	Description
1	19" compatible power supply height 3 U width A: 6, 10, 14 HP depth 171.93 mm (160 mm board depth) connector H 15 M coding strip (fitted)

ORDER INFORMATION

Voltage V	Current A	Power W	Width HP	Description	Part no.
V1: 5 V_2: 12 V_3: 12	I_1: 0.5 I_2: 0.2 I_3: 0.2	8	6	PSK 312	13105-051
V1: 5 V_2: 12 V_3: 12	I_1: 1.5 I_2: 0.5 I_3: 0.5	20	10	PSM 312	13105-052
V1: 5 V_2: 12 V_3: 12	I_1: 3 I_2: 1 I_3: 1	39	14	PSG 312	**13105-053**
Front panel for PSK 6 HP, 1 piece					**21005-470**
Front panel for PSM 10 HP, 1 piece					**21005-451**
Front panel for PSG 14 HP, 1 piece					**21005-439**
EMC gaskets (stainless steel) 3 U, 97 mm, stainless steel, two pieces necessary per front panel, PU 10 pieces					**21101-705**
Connector H 15 F Mating connector (female) for wiring inputs/outputs (6.3 mm FASTON), 1 piece					**69001-733**
Coding PU (1 keying/coding strip, 2 pieces keying/coding pins)					**60800-123**
Mains voltage conversion kit 230 V to 115 V, 1 piece					**43105-999**

Note

- **Please order front panel separately** (Al, front anodised, rear iridescent green chromated, with vertical grooves for EMC gaskets, incl. assembly kit)
- PSK without case
- Output data at T_A = 0 ... 50 °C
- Further accessories see page 9.16

Connector pin-out

Pin	Connection
4	Sense line + V_1(PSM, PSG)
6	Output + V_1
8	Output 0 V_1
10	Sense line 0 V_1(PSM, PSG)
12	Output + V_2
14	Output 0 V_2
16	Output + V_3
18	Output 0 V_3
20	Data save
22	Power failure
24	0 V for pin 20, 22
26	–
28	L
30	N
32	PE ⏚

Power supplies–19" DC/DC converters

coolpower 100 W, single



11301001

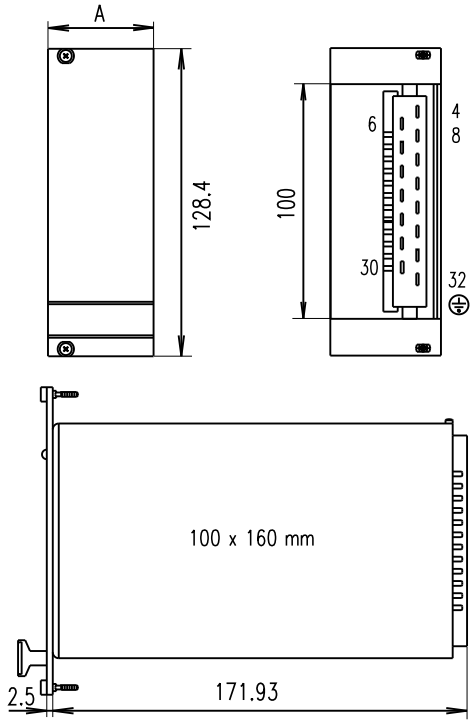

DIJM0084

- Wide input voltage range from 20 to 72 V_{DC}
- High power density
- Single output voltage, redundancy diode fitted
- External ON/OFF
- Galvanic separation between primary and secondary circuits
- Passive current-share operation

CE

DELIVERY COMPRISES

Qty	Description
1	19" compatible power supply height 3 U width A: 6 HP depth 171.93 mm (160 mm board depth) connector H 15 M coding strip (fitted)

ORDER INFORMATION

Voltage V	Current A	Power W	Description	Part no.
5 [1]	20	100	CPDC 105	**13103-002**
12 [1]	8.5	102	CPDC 112	13103-003
15 [1]	6.7	100	CPDC 115	13103-004
24 [2]	4.5	108	CPDC 212	13103-007
1) Front panel 6 HP, Al, front anodised, rear iridescent green chromated, with vertical grooves for EMC gaskets, incl. assembly kit, 1 piece				**21006-955**
2) Front panel 6 HP, Al, front anodised, rear iridescent green chromated, with vertical grooves for EMC gaskets, incl. assembly kit, 1 piece				**21006-956**
EMC gaskets (stainless steel) 3 U, 97 mm, stainless steel, two pieces necessary per front panel, PU 10 pieces				**21101-705**
Connector H 15 F Mating connector (female) for wiring inputs/outputs (6.3 mm FASTON), 1 piece				**69001-733**
Coding PU (1 keying/coding strip, 2 pieces keying/coding pins)				**60800-123**

Note

- **Please order front panel separately**
- Power supply with CPDC 212, dual output voltages 24, 30 V (2 x 12 V, 2 x 15 V)
- Front panel for 13103-007: 21006-956
- For higher input voltages (100 ... 360 V_{DC}) see maxpower single, page 9.4
- Further accessories see page 9.16

Connector pin-out

Pin	5, 12, 15 V Connection
4	Output + V_1
6	Output + V_1
8	Sense line + V_0
10	Sense line 0V V_1
12	Output 0V V_1
14	Output 0V V_1
16	
18	
20	
22	Internally engaged
24	Output OK
26	Ext. ON/OFF*
28	$+V_E$
30	0V V_E
32	PE ⏚

Pin	24 V Connection
4 6 8	Output + 24 ... 30 V via diode
10	Output 0 V
12	Output 0 V
14	Output 0 V
16	Internally engaged
18	Internally engaged
20	Internally engaged
22	Internally engaged
24	
26	
28	$+V_E$
30	0V V_E
32	PE ⏚

Part number in bold face type: ready for shipping within 2 working days
Part number in normal type: ready for shipping within 10 working days

COOLPOWER 100 W, DUAL



11302003

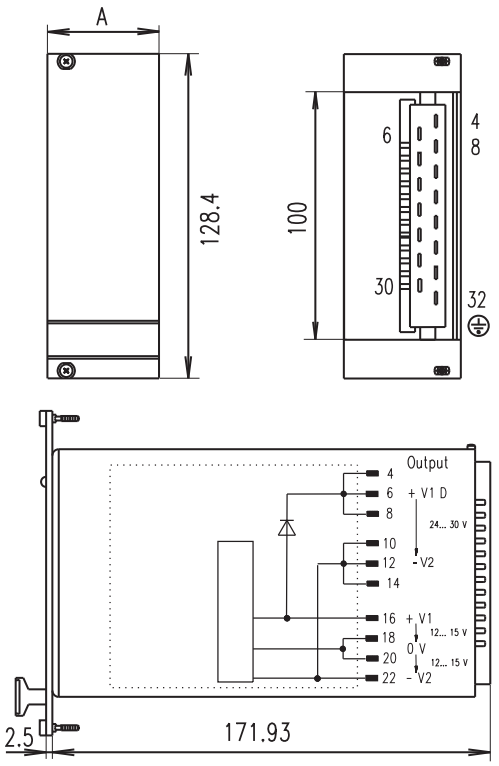

11302053

- Wide input voltage range from 20 to 72 V_{DC}
- High power density
- 2 output voltages (or single output voltage 24 – 30 V via internal redundancy diode V_1D)
- Galvanic separation between primary and secondary circuit

CE

DELIVERY COMPRISES

Qty	Description
1	19" compatible power supply height 3 U width A: 6 HP depth 171.93 mm (160 mm board depth) connector H 15 M coding strip (fitted)

ORDER INFORMATION

Voltage min. ... max. V	Current A	Power W	Description	Part no.
V_1: 12 ... 15 V_2: -12 ...-15	I_1: 4.5 I_2: 4.5	108	CPDC 212	13103-007
Front panel 6 HP, Al, front anodised, rear iridescent green chromated, with vertical grooves for EMC gaskets, incl. assembly kit, 1 piece				**21006-956**
EMC gaskets (stainless steel) 3 U, 97 mm, stainless steel, two pieces necessary per front panel, PU 10 pieces				**21101-705**
Connector H 15 F Mating connector (female) for wiring inputs/outputs (6.3 mm FASTON), 1 piece				**69001-733**
Coding PU (1 keying/coding strip, 2 pieces keying/coding pins)				**60800-123**

Note

- **Please order front panel separately**
- 1 output voltage via output pins V_1D 24 V ... 30 V, I_1D 4.5 A, 108 W
- Output data at T_A = 50 °C
- Adjustment range 12 V ... 15 V
- For higher input voltages (100 ... 360 V_{DC}), see maxpower single, page 9.7
- Further accessories see page 9.16

Connector pin-out

Pin	Connection
4	Output + V_1D
6	Output + V_1D
8	Output + V_1D
10	Output – V_2
12	Output – V_2
14	Output – V_2
16	Output + V_1
18	Output V_1/V_2 0 V
20	Output V_1/V_2 0 V
22	Output – V_2
24	–
26	–
28	Input +Vi
30	Input 0 V
32	PE ⏚

COOLPOWER 100 W, TRIPLE



11302004

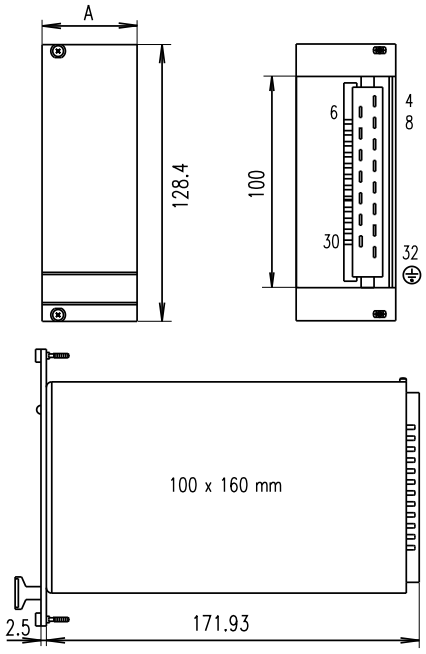

DIJM0084

- Wide input voltage range from 20 to 72 V_{DC}
- High power density
- 3 output voltages, galvanically separated
- Galvanic separation between primary and secondary circuit
- External ON/OFF

CE

DELIVERY COMPRISES

Qty	Description
1	19" compatible power supply height 3 U width A: 6 HP depth 171.93 mm (160 mm deep boards) connector H15M (fitted) keying/coding peg (fitted)

ORDER INFORMATION

Voltage min. ... max. V	Current A	Power W	Description	Part no.
V_1: 5 V_2: 12 ...15V_3: 12 ...15	I_1: 10 I_2: 2 I_3: 2	98	CPDC 312	**13103-016**
Front panel 6 HP, Al, front anodised, rear colourless chromated, with vertical grooves for EMC gaskets, incl. assembly kit, 1 piece				**21006-957**
EMC gaskets (stainless steel) 3 U, 97 mm, stainless steel, two pieces necessary per front panel, PU 10 pieces				**21101-705**
Connector H 15 F Mating connector (female) for wiring inputs/ outputs (6.3 mm FASTON), 1 piece				**69001-733**
Coding PU (1 keying/coding strip, 2 pieces keying/coding pins)				**60800-123**

Note

- **Please order front panel separately**
- Output data at T_A = 50 °C
- Adjustment range V_2, V_3 12 ... 15 V
- Input voltage 100 ... 360 V_{DC}, see maxpower triple, page 9.8
- Further accessories see page 9.16

Connector pin-out

Pin	Connection
4	Output + V
6	Output + V_1
8	Sense line + V_2
10	Sense line V_1 0 V
12	Output V_1 0 V
14	Output V_1 0 V
16	Output + V_2
18	Output V_2 0 V
20	Output + V_3
22	Output V_3 0 V
24	–
26	External ON/OFF
28	Input +Vi
30	Input 0 V
32	PE ⏚

Part number in bold face type: ready for shipping within 2 working days
Part number in normal type: ready for shipping within 10 working days

ACCESSORIES

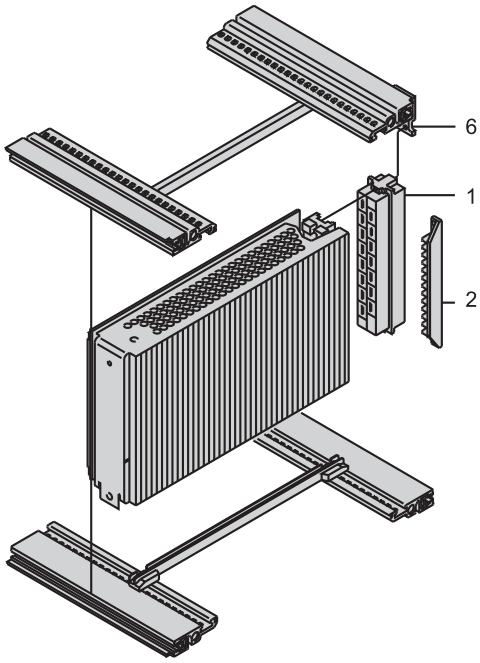

PSA45379

- For slimpower, maxpower, coolpower and linear regulators
- Z-rail (item 6)
- Mating connector female H 15 F (item 1)
- Coding (item 2)
- Wall/horizontal rail mounting

Z-RAIL, 4 HP

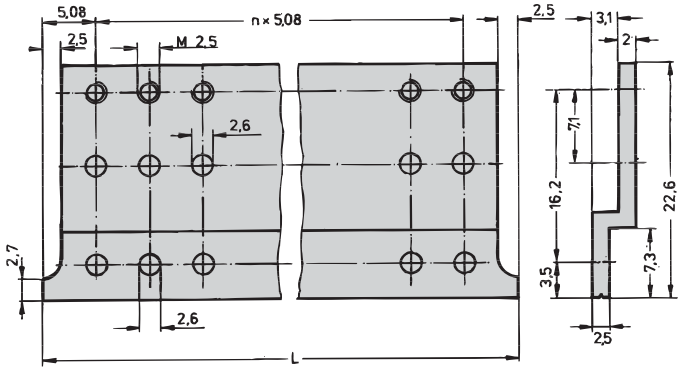

A3-420

- For bolting a H15 F connector to the rear horizontal rail/case (item 6)
- Provides the standard plug-in depth of the PSUs

ORDER INFORMATION

Description	Qty/PU	Part no.
Z-rail, 4 HP (20.32 mm)	1	**30822-166**

Note

- Two Z-rails are required per connector

CONNECTOR H 15 F



05592018

- Connector EN 60603 (DIN 41612) H15 F for 6.3 mm FASTON
- In 19" power supply units the H 15 male connector is fitted, PIN 32 with capacitive earthing contact
- Compatible with connector H15 M of e.g. 19" plug-in equipment

ORDER INFORMATION

Item	Description	Qty/PU	Part no.
1	Type H	1	**69001-733**

KEYING/CODING

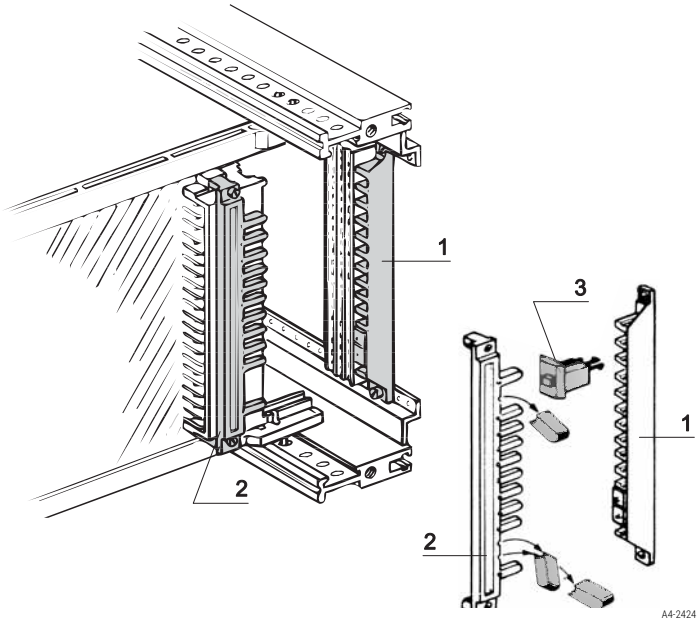

- Mechanical coding prevents a PSU being fitted on the wrong slot, space requirement 4 HP
- Coding:
  - Female strip (item 2), fitted on PSU (except slimpower)
  - Coding strip (item 1) mounts on the Z/horizontal rail
  - Placement of coding pins (item 3) in the coding strip (item 1)
  - Removal of studs at the appropriate place in the female strip
- With 2 coding pins there are 66 coding possibilities

ORDER INFORMATION

Description	Part no.
Keying/coding strip, Crastin (UL 94 V-0) 1 piece, keying/coding pins, Crastin (UL 94 V-0), 2 pieces	**60800-123**

WALL/HORIZONTAL RAIL MOUNTING



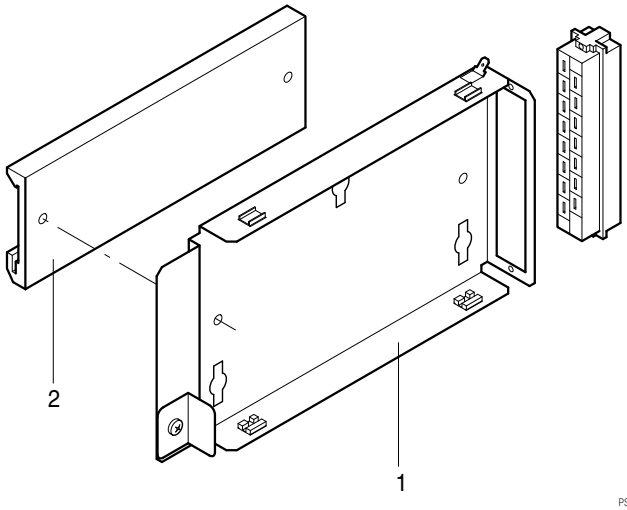

- Suitable for 19"-compatible 3 U PSUs
- 2 mounting options
  - Wall mounting bracket can be fitted in any position with screws and PSU is inserted
  - Horizontal rail adaptor is bolted to wall mounting bracket, then the 19" PSU can be clipped to a horizontal rail

ORDER INFORMATION

Item	Description	Qty/PU	Part no.
1	Wall mounting bracket, St	1	**11000-001**
2	Horizontal rail adaptor bracket, Al	1	**11000-002**
Connector H 15 F FASTON connection, 1 piece			**69001-733**

Part number in bold face type: ready for shipping within 2 working days
Part number in normal type: ready for shipping within 10 working days

AC/DC, DOUBLE FULL-SIZE, WITH POWER MANAGEMENT (EMMC)



11316001

- Mains input at front with wide input voltage range for AC voltages with IEC locking system
- Construction compatible with AdvancedMC double full-size
- Supports N+1 and 2+2 redundancy, load sharing and hot swap
- Power management for 16 current channel (12 AMC, 2 CU and 2 MCHs)
- High efficiency
- Visual performance display

The MTCA PSU 600 is an exceptionally efficient power module (PM) for MicroTCA® applications. This 600W power supply is the most efficient available in double-width full-size format. This PM's integrated management controller makes it ideally suited for use in complex communications systems running the latest generations of processors and an increased number of AMC modules. The MTCA PSU 600 provides the power required for 12 AMCs, 2 Cooling Units (CUs) and 2 MicroTCA® Carrier Hubs (MCHs).

DELIVERY INCLUDES

Qty.	Description
1	PSU for MicroTCA Double height (148.3 mm) Full-size width (6 HP) Depth 186.65 mm Connector MicroTCA Power Front panel with handle and EMC gasket (fitted)

ORDER INFORMATION

Voltage V	Current A	Power W	Description	Part no.
V1: 12 V_2: 3.3	I_1: 6.8 I_2: 0.18	600	MTCA PSU 600	**11098-547**

Power supplies–for MicroTCA

AC/DC, DOUBLE FULL-SIZE, WITHOUT MANAGEMENT



11309004

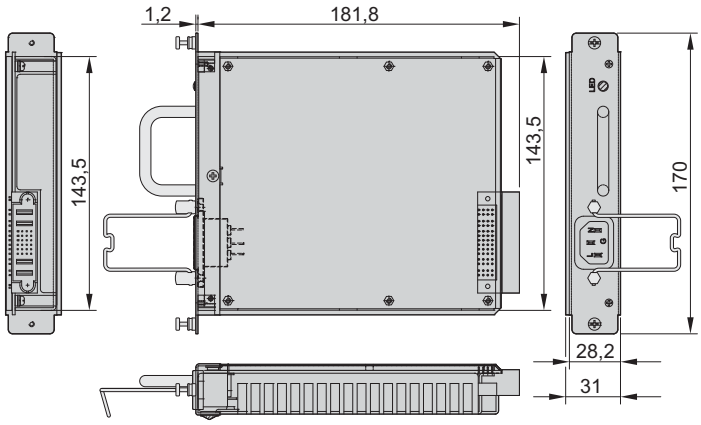

11312050

- Wide input voltage range 90 ... 264 V_{AC}
- Active power factor correction
- Construction compatible with AdvancedMC double full-size
- Single-wire current share cable for redundancy operation
- 2 output voltages, 12 V and 3.3 V
- Corresponds to EMC class B as per EN 55022
- Without MicroTCA power management controller
- Mains input at front

DELIVERY COMPRISES

Qty	Description
1	PSU for MicroTCA height double (148.3 mm) width full-size (6 HP) depth 186.65 mm connector Molex SSI front panel with handle and EMC gasket (fitted)

ORDER INFORMATION

Voltage V	Current A	Power W	Description	Part no.
V1: 12 V_2: 3.3	I_1: 25 I_2: 3	300	MCA 300 AC	**11098-392**
V1: 12 V_2: 3.3	I_1: 45.8 I_2: 3	550	MCA 550 AC	**11098-416**

Note

- Output data for T_A = -25 ... 55 °C with forced cooling of 20 cfm
- Connector FCI 51720-10202402AA or Molex 87631-2019

Part number in bold face type: ready for despatch within 2 working days
Part number in normal type: ready for despatch within 10 working days

Power supplies–for VMEbus

AC/DC, 19", 6 U, TRIPLE



11301002

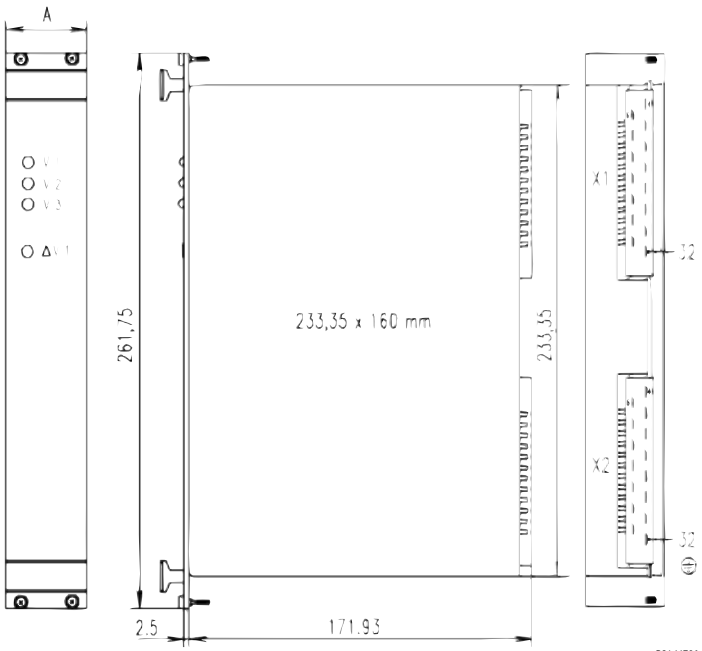

PSA44726

Connector pin-out

Pin	Connection x1 (at top)	Connection x2 (at bottom)
4	Output + V_1	ACFAIL
6	Output + V_1	SYSRESET
8	Output + V_1	–
10	Output + V_1	Current Share Bus
12	Output + V_1	Shutdown 4 ... 28 V
14	Sense line + V_1	GND Shutdown
16	Output - V_3	–
18	Output 0 $V_{1,2,3}$	–
20	Output 0 $V_{1,2,3}$	–
22	Output 0 $V_{1,2,3}$	–
24	Output 0 $V_{1,2,3}$	–
26	Output 0 $V_{1,2,3}$	–
28	Output + V_2	L
30	Output + V_2	N
32	Sense line 0 V_1	PE y

- Wide input voltage range 90 ... 264 V_{AC} and 130 ... 350 V_{DC} with active power factor correction (PFC)
- 3 output voltages
- VMEbus signalling

DELIVERY COMPRISES

Qty	Description
1	19" compatible power supply height 6 U width A: 8, 12 HP depth 171.93 mm (160 mm board depth) front panel with handles (fitted) connector H 15 M (2 pieces) coding strip (2 pieces, fitted)

ORDER INFORMATION

Voltage V	Current A	Power W	Width HP	Description	Part no.
V1: 5 V_2: 12 V_3: -12	I_1: 20 I_2: 4 I_3: 3	150 (60)	8	MPS 015	13100-205
V1: 5 V_2: 12 V_3: -12	I_1: 28 I_2: 7 I_3: 3	224 (84)	12	MPS 022	13100-203
V1: 5 V_2: 15 V_3: -15	I_1: 28 I_2: 5.6 I_3: 2.4	224 (84)	12	MPS 022/15	13100-204
EMC gaskets (stainless steel) 6 U, 232 mm, stainless steel, 2 pieces necessary per front panel, PU 10 pieces					**21101-707**
Connector H 15 F Mating connector (female) for wiring inputs/outputs (6.3 mm FASTON), 1 piece					**69001-733**
Coding PU (1 keying/coding strip, 2 pieces keying/coding pins)					**60800-123**

Note

- Output data at T_A = 0 ... 40 °C
- Values in brackets: Output power V_2 + V_3
- Further accessories see page 9.16

Power supplies–for VMEbus

AC/DC, OPEN FRAME, TRIPLE



11405002

Photo shows MP6 PSUs

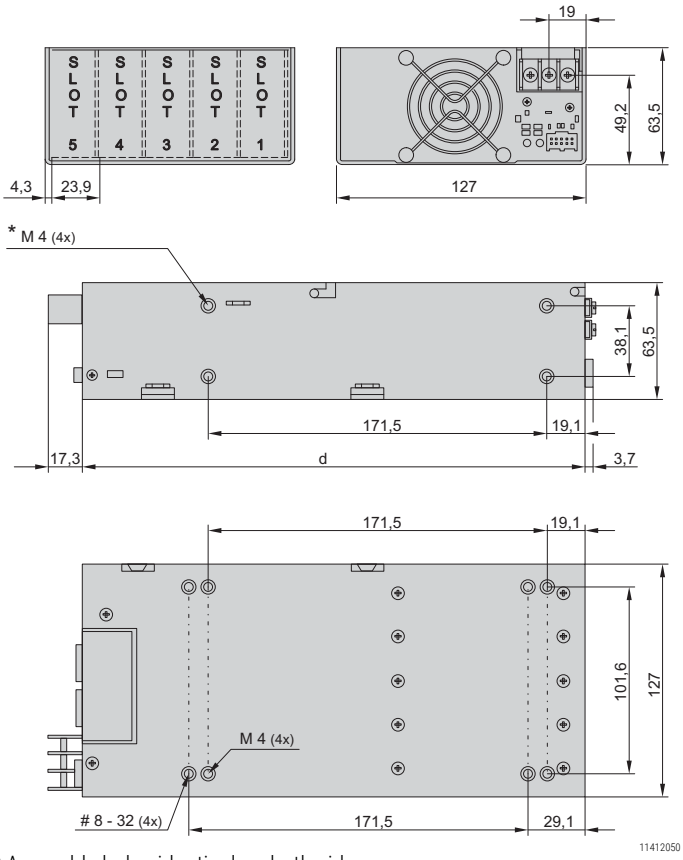

11412050

* Assembly holes identical on both sides

- For VME applications
- Wide input voltage range 85 ... 264 VAC
- 3 output voltages
- High performance
- Output power 444 ... 800 W

DELIVERY COMPRISES

Qty	Description
1	Open frame PSU

ORDER INFORMATION

Voltage V	Current A	Power W	Description	d mm	Part no.
V1: 5 V_2: 12 1) V_3: 12	I_1: 60 I_2: 10 I_3: 4	444 2)	MP4 2E-4LL-00	254.0	11098-267
V1: 5 V_2: 12 V_3: 12	I_1: 60 I_2: 17 I_3: 17	708 3)	MP6 2E-1L-1L-00	279.4	11098-266
V1: 5 V_2: 12 1) V_3: 12	I_1: 120 I_2: 10 I_3: 4	744 3)	MP6 3E-4LL-00	279.4	11098-140
V1: 5 V_2: 12 1) V_3: 12	I_1: 120 I_2: 17 I_3: 17	800 3)	MP6 3E-1L-1L-00	279.4	11098-231
Accessories					
Set of connectors with all input/output connectors, PU 1 kit					**21009-038**

1) 10 % base load necessary, sum of 12 V outputs max. 144 W
2) Output max. 400 W at 85 V_{AC} ... 180 V_{AC}
3) Output max. 600 W at 85 V_{AC} ... 180 V_{AC}

Note

- Output data at -20 °C ... +50 °C
- Input: AC 85 ... 264 V (47 ... 440 Hz), DC 120 ... 350 V
- Output voltages adjustable, w10 %
- Signalling: Input ok, DC output ok
- Other output voltages available on request

Part number in bold face type: ready for despatch within 2 working days
Part number in normal type: ready for despatch within 10 working days

19" SWITCHED-MODE POWER SUPPLY FOR COMPACTPCI SERIAL



11315001

- 19" pluggable PSU for CompactPCI Serial applications
- Very wide input voltage range for both AC and DC
- Active power factor correction and active current-share function
- N+1 redundancy, hot swap
- Output signaling: PS present, power failure, PO ON and enable
- I2C interface
- Temperature monitoring
- Sense line
- UL, cUL and DEMKO certificates, CE-compliant

DELIVERY INCLUDES

Qty	Description
1	19"-compatible PSU Height 3 U Width 8 HP 160 mm board depth PwrBlade connector (fitted) Front panel with handle and EMC contact strip (fitted)

ORDER INFORMATION

Voltage V	Current A	Power W	Input voltage	Part no.
V1: 12 V_2: 5	I_1: 25 I_2: 2.5	300	AC: 90 ... 264 V	**11098-538**
Accessories				
CompactPCI Serial power backplane, 3 U, 8 HP, 1 slot 1 piece				23098-397

Power supplies–for CompactPCI and VME64x

AC/DC, 19", 3 U, QUAD



11302005

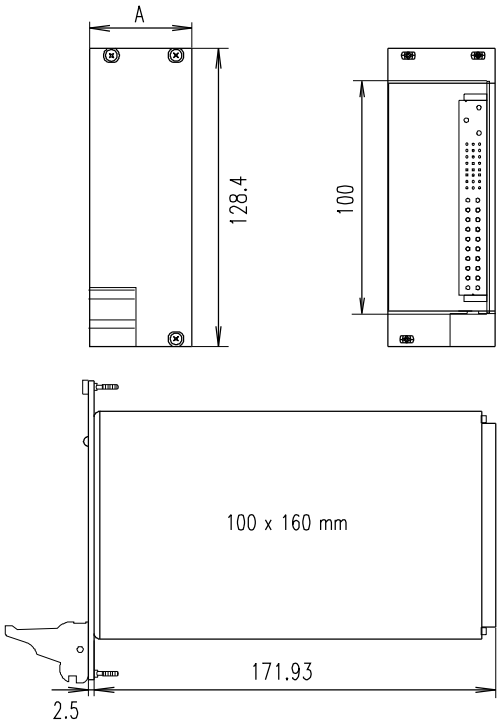

11302052

- Wide input voltage range 90 ... 264 V_{AC} with power factor correction (PFC)
- 4 output voltages
- Connector P 47
- Redundant operation with Current Share Bus (CSB), hot-swap
- CompactPCI signalling

DELIVERY COMPRISES

Qty	Description
1	19" compatible power supply height 3 U width A 8 HP depth 171.93 mm (160 mm board depth) connector P 47 front panel with handles and EMC gasket fitted

ORDER INFORMATION

Voltage V	Current A	Power W	Description	Part no.
V1: 5 V_2: 3.3 V_3: 12 V_4: -12	I_1: 40 I_2: 40 I_3: 5.5 I_4: 2	250	CPCI 250 AC	**13100-141**
Power backplane with P47 connector 3 U, width 39.6 mm, 1 × connector position P47, 1 piece				**23098-105**
Power backplane with P47 connector 3 U, width 80.3 mm, 2 x connector positions P47 (side-by-side), 1 piece				**23098-115**
Power backplane with P47 connector 6 U, width 39.6 mm, 1 × connector position P47, top, 1 piece				**23098-116**
Power backplane with P47 connector 6 U, width 39.6 mm, 2 × connector position P47, one above the other, 1 piece				**23098-117**
Guide rail with keying/coding, groove width 2.0 mm, with 0.1" offset Standard pack quantity 50 pieces				**64560-071**

Note

- Output data at T_A = 0 ... 50 °C with forced air cooling of 2 m/s
- 47-pin CompactPCI connector to PICMG 2.11 specification

Part number in bold face type: ready for shipping within 2 working days
Part number in normal type: ready for shipping within 10 working days

Power supplies–for CompactPCI and VME64x

AC/DC, 19", 6 U, QUAD



11308007

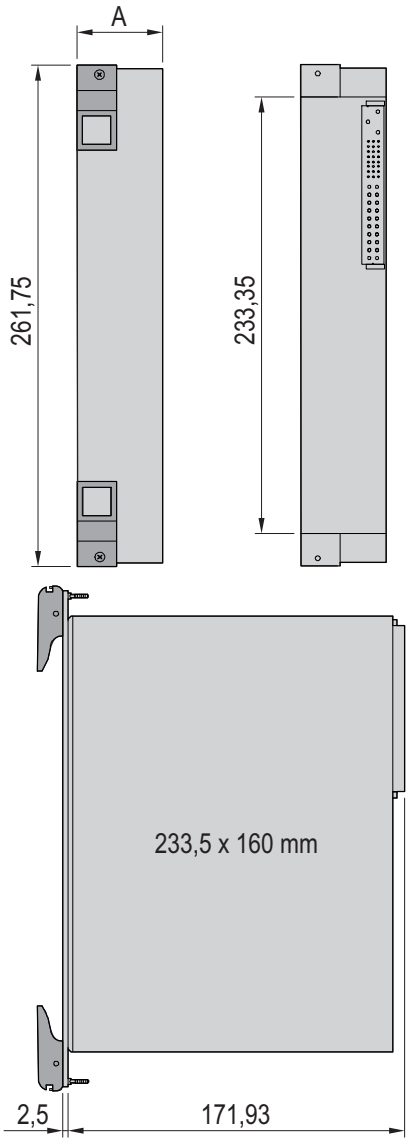

11302051

- Wide input voltage range 90 ... 264 V_{AC} with power factor correction (PFC)
- 4 output voltages
- Connector P 47
- Redundant operation with Current Share Bus (CSB), hot-swap
- CompactPCI signalling

DELIVERY COMPRISES

Qty	Description
1	19" compatible power supply height 6 U width A: 8 HP depth 171.93 mm (160 mm board depth) connector P 47 front panel with handles and textile EMC gasket fitted

ORDER INFORMATION

Voltage V	Current A	Power W	Description	Part no.
V1: 5 V_2: 3.3 V_3: 12 V_4: -12	I_1: 50 I_2: 60 I_3: 12 I_4: 4	500	CPCI 500 AC	13100-145
Power backplane with P47 connector 6 U, width 39.6 mm, 1 × connector position P47, top, 1 piece				**23098-116**
Guide rail with keying/coding, groove width 2.0 mm, with 0.1" offset , Standard pack quantity 50 pieces				**64560-071**

Note

- Output data at T_A = -25 ... 55 °C with forced air cooling of 1.5 m/s
- 47-pin CompactPCI connector to PICMG 2.11 specification

Power supplies–for CompactPCI and VME64x

AC/DC, OPEN FRAME, 300 W, QUAD



11408002

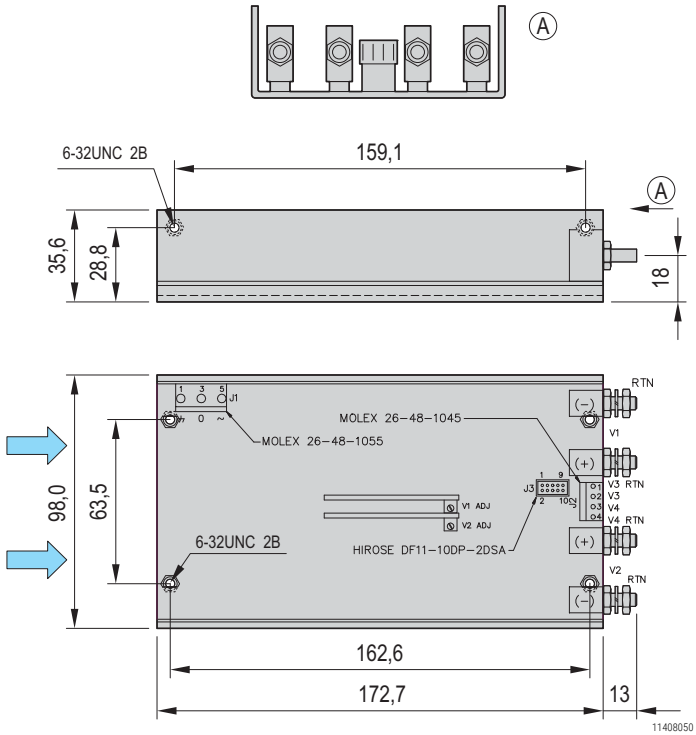

11408050

- For CompactPCI and VME64x applications
- Wide input voltage range 85 ... 264 V_{AC}
- 4 output voltages
- High performance, efficiency typically 85 %
- Output power 300 W
- Signalling: Output voltage OK

DELIVERY COMPRISES

Qty	Description
1	Open frame power supply, dimensions 36 x 99 x 173 mm; weight 850 g

ORDER INFORMATION

Voltage V	Voltage min. ... max. V	Current A	Power W	Description	Part no.
V1: 5 V_2: 3.3 V_3: 12 V_4: 12	4.75 ... 5.25 3.14 ...3.46 – –	I_1: 40 I_2: 40 I_3: 4 I_4: 1.5	300	EF306-433	**11098-316**
Set of connectors with all input and output plugs, PU 1 kit					21009-039

Note

- Output data at -5 °C ... 50 °C
- Output voltages 5 V and 3.3 V adjustable, w 10 %
- Forced cooling at 2 m/s (230 lfm) required
- With remote-control function Ext. ON/OFF
- With auxiliary supply 5 V/ 5 mA

Part number in bold face type: ready for shipping within 2 working days
Part number in normal type: ready for shipping within 10 working days

Power supplies–for CompactPCI and VME64x

AC/DC, OPEN FRAME, 600 W, QUAD



11405001

Photo shows 11098-212

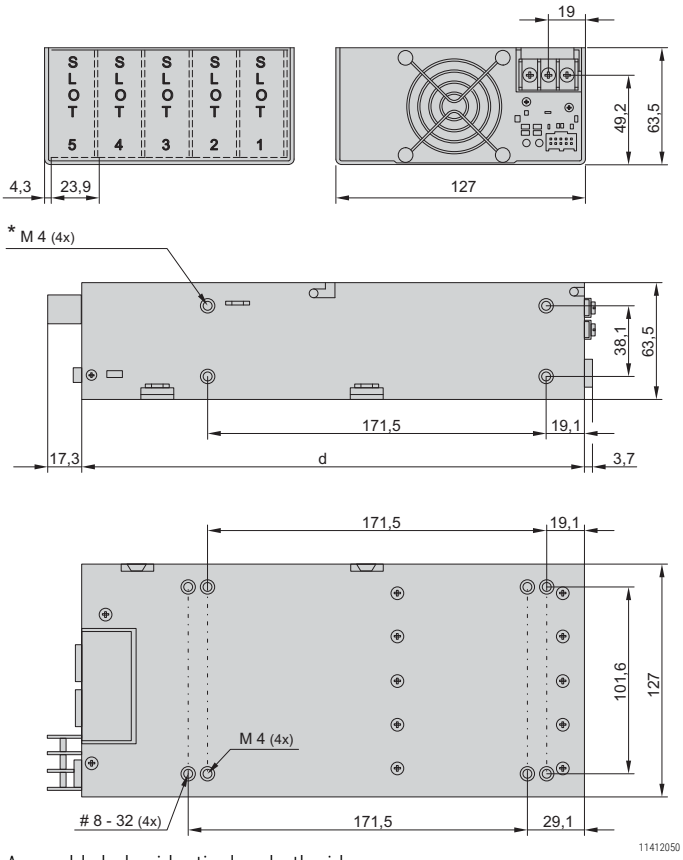

11412050

* Assembly holes identical on both sides

- For CompactPCI and VME64x applications
- Wide input voltage range 85 ... 264 V_{AC}
- 4 output voltages
- High performance

DELIVERY COMPRISES

Qty	Description
1	Open frame PSU

ORDER INFORMATION

Voltage V	Current A	Power W	Description	d mm	Part no.
V1: 5 V_2: 3.3 V_3: 12 V_4: 12	I_1: 60 I_2: 35 I_3: 10 I_4: 4	560 2)	MP4 2E-1D-4LL-00	254.0	11098-212
V1: 5 V_2: 3.3 V_3: 12 V_4: 12	I_1: 60 I_2: 60 I_3: 10 I_4: 4	642 3)	MP6 2D-2E-4LL-00	279.4	11098-207
Accessories					
Set of connectors with all input and output plugs, PU 1 kit					21009-039

1) 10 % base load necessary, sum of 12 V outputs max. 144 W
2) Output max. 400 W at 85 V_{AC} ... 180 V_{AC}
3) Output max. 600 W at 85 V_{AC} ... 180 V_{AC}

Note

- Output data at -20 °C ... 50 °C
- Input: AC 85 ... 264 V (47 ... 440 Hz), DC 120 ... 350 V
- Output voltages adjustable, w10 %
- Signalling: Input ok, DC output ok
- Other output voltages available on request

Power supplies–for CompactPCI and VME64x

DC/DC, 19", 3 U, QUAD



11302005

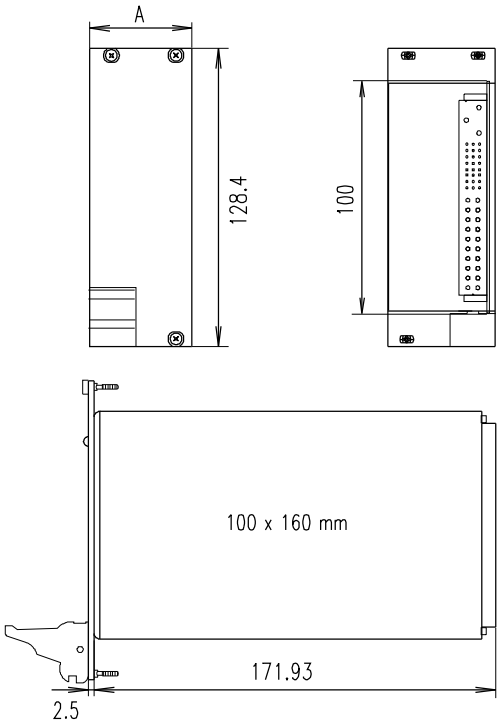

11302052

- Input voltage 48 V_{DC} (36 ... 75 V_{DC})
- 4 output voltages
- Connector P 47
- Redundant outputs with Current Share Bus (CSB), hot-swap
- CompactPCI signalling

DELIVERY COMPRISES

Qty	Description
1	19" compatible power supply height 3 U width A: 8 HP depth 171.93 mm (160 mm board depth) connector P 47 front panel with handle and EMC contact strips (fitted)

ORDER INFORMATION

Voltage V	Current A	Power W	Description	Part no.
V1: 5 V_2: 3.3 V_3: 12 V_4: -12	I_1: 40 I_2: 40 I_3: 5.5 I_4: 2	250	CPCI 250 DC	13100-142
Power backplane with P47 connector 3 U, width 39.6 mm, 1 × connector position P47, 1 piece				**23098-105**
Power backplane with P47 connector 3 U, width 80.3 mm, 2 x connector positions P47 (side-by-side), 1 piece				**23098-115**
Power backplane with P47 connector 6 U, width 39.6 mm, 1 × connector position P47, top, 1 piece				**23098-116**
Power backplane with P47 connector 6 U, width 39.6 mm, 2 × connector position P47, one above the other, 1 piece				**23098-117**
Guide rail with keying/coding, groove width 2.0 mm, with 0.1" offset Standard pack quantity 50 pieces				**64560-071**

Note

- Output data at T_A = 0 ... 50 °C, with forced air cooling of 2 m/s
- 47-pin CompactPCI connector to PICMG 2.11 specification

Part number in bold face type: ready for despatch within 2 working days
Part number in normal type: ready for despatch within 10 working days

Power supplies–for CompactPCI and VME64x

DC/DC, 19", 6 U, QUAD



11303002

- Input voltage range 48 V_{DC} (36 ... 72 V_{DC})
- 4 output voltages
- Connector P 47
- Redundant outputs with Current Share Bus (CSB), hot-swap
- Compact PCI signalling

DELIVERY COMPRISES

Qty	Description
1	19" compatible power supply height 3 U width A: 8 HP depth 171.93 mm (160 mm deep boards) connector P 47 (fitted) front panel with handles and EMC contact strip (fitted)

ORDER INFORMATION

Voltage V	Current A	Power W	Description	Part no.
V1: 5 V_2: 3.3 V_3: 12 V_4: -12	I_1: 50 I_2: 60 I_3: 12 I_4: 4	500	CPCI DC-6U-500	13100-146
Power backplane with P47 connector 6 U, width 39.6 mm, 1 × connector position P47, top, 1 piece				**23098-116**
Guide rail with keying/coding, groove width 2.0 mm, with 0.1" offset Standard pack quantity 50 pieces				**64560-071**

Note

- Output data at T_A = -10 ... 55 °C with forced air cooling of 2 m/s
- 47-pin CompactPCI connector to PICMG 2.11 specification

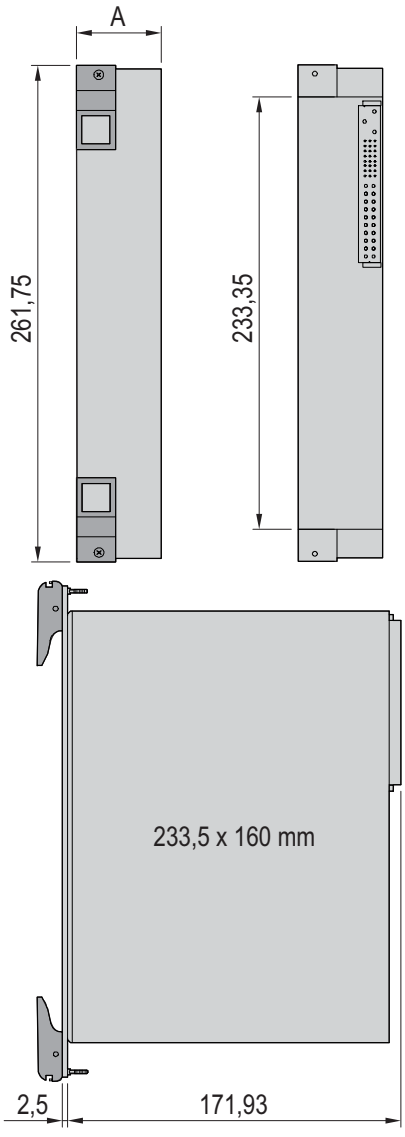

11302051

APPLICATION EXAMPLES AND SPECIAL DEVICES CREATED TO CUSTOMER SPECIFICATIONS



11308002 11309004

Application: Redundant and uninterruptible 19" DC power supply units



11309002

Application: AC/DC switch-mode PSU for power supply to video monitoring systems



11309003

Application: AC/DC switch-mode power supply for telecommunications applications



11309001

Application: AC/DC linear regulator for communications systems (defence systems)



11309005

Application: DC/DC converter for railway applications



11309005

Application: DC/DC converter for supply power to fans (with monitoring)

North America

Warwick, RI, USA
Tel +1.800.525.4682
San Diego, CA, USA
Tel +1.800.854.7086

Europe, Middle East & India

Straubenhardt, Germany
Tel +49 7082 794 0
Betschdorf, France
Tel +33 3 88 90 64 90
Warsaw, Poland
Tel +48 22 209 98 35
Hemel Hempstead,
Great Britain
Tel +44 1442 24 04 71
Lainate, Italy
Tel +39 02 932 714 1
Dubai, United Arab Emirates
Tel +971 4 37 81 700
Bangalore, India
Tel +91 80 67152000
Istanbul, Turkey
Tel +90 216 250 7374

Asia Pacific

Shanghai, China
Tel +86 21 2412 6943
Singapore
Tel +65 6768 5800
Shin-Yokohama, Japan
Tel +81 45 476 0271

Our powerful portfolio of brands:

CADDY ERICO HOFFMAN RAYCHEM SCHROFF TRACER

nVent

nVent.com/SCHROFF

©2018 nVent. All nVent marks and logos are owned or licensed by nVent Services GmbH or its affiliates. All other trademarks are the property of their respective owners.
nVent reserves the right to change specifications without notice.