PN4227

Pressure sensor with display

PN-001BRBN14-HFBOW/LS/ /V

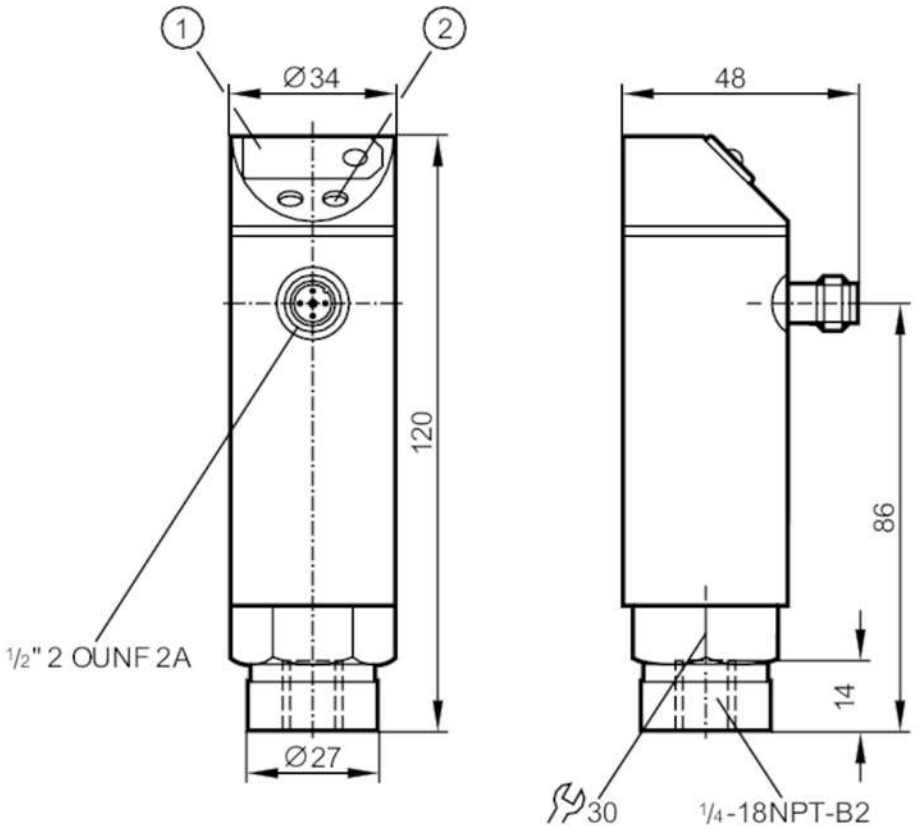

1 7-segment LED display
2 programming button

Product characteristics				
Number of inputs and outputs	Number of digital outputs: 1			
Measuring range	0...1 bar	0...1000 mbar	0...14.5 psi	0...100 kPa
Process connection	threaded connection 1/4" NPT internal thread			
Application				
Application	for industrial applications			
Media	liquids and gases			
Medium temperature [°C]	-25...80			
Min. bursting pressure	30000 mbar	430 psi	3000 kPa	
Pressure rating	10000 mbar	145 psi	1000 kPa	
Type of pressure	relative pressure			
Electrical data				
Operating voltage tolerance [%]	5...10			
Operating voltage [V]	90...250 AC			
Nominal voltage AC [V]	< 250			
Current consumption [mA]	< 10			
Min. insulation resistance [MΩ]	100; (500 V DC)			
Protection class	II			

PN4227

Pressure sensor with display

PN-001BRBN14-HFBOW/LS/ /V

Reverse polarity protection		no		
Power-on delay time	[s]	0.2		
Integrated watchdog		yes		
Inputs / outputs				
Number of inputs and outputs		Number of digital outputs: 1		
Outputs				
Total number of outputs		1		
Output signal		switching signal		
Electrical design		Triac		
Number of digital outputs		1		
Output function		normally open / normally closed; (parameterisable)		
Max. voltage drop switching output AC	[V]	2		
Permanent current rating of switching output AC	[mA]	250; ((...70 °C) 1000 (...60 °C) 1500 (...45 °C) 2500 (...20 °C))		
Switching frequency AC	[Hz]	< 160		
Short-circuit proof		no		
Overload protection		no		
Measuring/setting range				
Measuring range		0...1 bar	0...1000 mbar	0...14.5 psi	0...100 kPa
Set point SP		10...999 mbar	0.1...14.6 psi	1...99.9 kPa	
Reset point rP		5...994 mbar	0.1...14.5 psi	0.5...99.4 kPa	
In steps of		1 mbar	0.1 psi	0.1 kPa	
Accuracy / deviations				
Switch point accuracy	[% of the span]	< ± 1,0		
Repeatability	[% of the span]	< ± 0,1; (with temperature fluctuations < 10 K)		
Linearity deviation	[% of the span]	< ± 0,5		
Hysteresis deviation	[% of the span]	< ± 0,1		
Long-term stability	[% of the span]	< ± 0,1; (per year)		
Temperature coefficient zero point	[% of the span / 10 K]	< ± 0,2; (-25...80 °C)		
Temperature coefficient span	[% of the span / 10 K]	< ± 0,3; (-25...80 °C)		
Response times				
Delay time programmable dS, dr	[s]	0, 0,2,...10, 11,...50		
Damping process value dAP	[s]	0...4		
Software / programming				
Adjustment of the switch point		programming button		
Parameter setting options		hysteresis / window; normally open / normally closed; switch-on/switch-off delay; Damping; adaptation of displayed values; display can be rotated and switched off; Display unit		

PN4227

Pressure sensor with display

PN-001BRBN14-HFBOW/LS/ /V

Operating conditions			
Ambient temperature	[°C]	-25...80	
Storage temperature	[°C]	-40...100	
Protection		IP 65	

Tests / approvals			
EMC		EN 61000-4-2 ESD	4 kV CD / 8 kV AD
		EN 61000-4-3 HF radiated	10 V/m
		EN 61000-4-4 Burst	2 kV
		EN 61000-4-6 HF conducted	10 V
Shock resistance		DIN IEC 68-2-27	50 g (11 ms)
Vibration resistance		DIN IEC 68-2-6	20 g (10...2000 Hz)
MTTF	[years]	224.58	
Pressure Equipment Directive		Sound engineering practice; can be used for group 2 fluids; group 1 fluids on request	

Mechanical data		
Weight	[g]	356.65
Housing		cylindrical
Dimensions	[mm]	Ø 34 / L = 120
Materials		stainless steel (304/1.4301); PC; PBT; PA; FKM
Materials (wetted parts)		stainless steel (303/1.4305); ceramics; FKM
Min. pressure cycles		100 million
Process connection		threaded connection 1/4" NPT internal thread
Restrictor element integrated		no (can be retrofitted)

Displays / operating elements		
Display	switching status	LED, red
	function display	7-segment LED display
	measured values	7-segment LED display

Electrical connection		
Required protection	miniature fuse to IEC60127-2 sheet 1; ≤ 5 A; fast acting	

Remarks		
Remarks	n.c. = not used	
Pack quantity	1 pcs.	

Electrical connection

Connector: 1 x 1/2"; coding: C



PN4227

Pressure sensor with display

PN-001BRBN14-HFBOW/LS/ /V

Connection

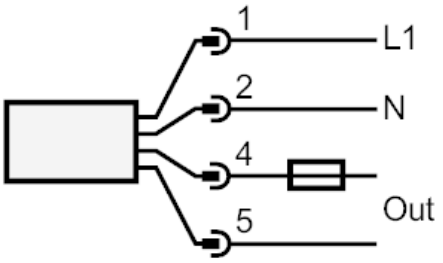

Note miniature fuse to IEC60127-2 sheet 1 ≤ 5 A fast acting