Sealed Ultra Subminiature Basic Switch
D2GW

The industry's smallest class * (8.3 x 6.5 x 5.3 mm) with a volume ratio that is 62% of conventional models (D2AW)



- A fixed slit saves space on customer units and contributes to a slim form
- A sliding structure delivers quiet operation
- Micro-load support thanks to high contact reliability
- Versatile actuator variation enables support for various operating bodies (shapes, materials, operations)
- A bilaterally symmetrical shape contributes to simpler designs
- Press-fit terminals enable solder-less contact

✻Based on Omron investigation in April 2021

RoHS Compliant

Model Number Legend

Some model number elements cannot be used in conjunction.
If you have any desired model with a specification not in this model number legend, contact your OMRON sales representative. We will consider if a requested model can be manufactured by modifying existing models.

D2GW-□□□□□-□
1 2 3 4 5 6

1. Mounting Structure
- A: Side slot (Only terminal type)
- AL: Side slot for leaf lever (Only terminal type)
- SC: M3-screw mounting models (Only lead wires type)

2. Actuator
- 0: Pin plunger
- 1: Straight hinge lever
- 6: Bent leaf lever

3. Lever Mounting Position
- None: Pin plunger or PCB terminals or Solder terminals
- L: Left side (Only Press-fit terminals/leaf leaver type) ✻1
- R: Right side (Only Press-fit terminals/leaf leaver type)

4. Contact Form
- 2: SPST-NC
- 3: SPST-NO

5. Terminals
- F: Press-fit terminals
- D: Straight PCB terminals
- H: Solder terminals
- M: Lead wires

6. Option Code
- Customized Code

✻1. The specifications for the lead wire type hinge lever are shown on the left only.

List of Models

Actuator	Terminals	Contact Form	Model: Lever Mounting Position	Side slot	M3-screw mounting models
Pin plunger 	PCB terminals (straight)	SPST-NC	---	D2GW-A02D	---
		SPST-NO	---	D2GW-A03D	---
	Press-fit terminals	SPST-NC	---	D2GW-A02F	---
		SPST-NO	---	D2GW-A03F	---
	Solder terminals	SPST-NC	---	D2GW-A02H	---
		SPST-NO	---	D2GW-A03H	---
	Molded lead wires	SPST-NC	---	---	D2GW-SC02M
		SPST-NO	---	---	D2GW-SC03M
Straight hinge lever 	PCB terminals (straight)	SPST-NC	---	D2GW-A12D	---
		SPST-NO	---	D2GW-A13D	---
	Press-fit terminals	SPST-NC	Left side	D2GW-A1L2F	---
		SPST-NO	Right side	D2GW-A1R2F	
		SPST-NC	Left side	D2GW-A1L3F	---
		SPST-NO	Right side	D2GW-A1R3F	
	Solder terminals	SPST-NC	---	D2GW-A12H	---
		SPST-NO	---	D2GW-A13H	---
	Molded lead wires	SPST-NC	Left side	---	D2GW-SC1L2M
		SPST-NO	Left side	---	D2GW-SC1L3M
Bent leaf lever 	PCB terminals (straight)	SPST-NC	---	D2GW-AL62D	---
		SPST-NO	---	D2GW-AL63D	---
	Press-fit terminals	SPST-NC	Left side	D2GW-AL6L2F	---
			Right side	D2GW-AL6R2F	
		SPST-NO	Left side	D2GW-AL6L3F	---
			Right side	D2GW-AL6R3F	
	Solder terminals	SPST-NC	---	D2GW-AL62H	---
		SPST-NO	---	D2GW-AL63H	---
	Molded lead wires	SPST-NC	Left side	---	D2GW-SC6L2M
			Right side	---	D2GW-SC6R2M
		SPST-NO	Left side	---	D2GW-SC6L3M
			Right side	---	D2GW-SC6R3M

If you have any desired model with a specification not in the above list, contact your OMRON sales representative. We will consider if a requested model can be manufactured by modifying existing models.

Contact Specifications

Contact	**Specification**	Slide
	Material	Silver Plated
Minimum applicable load (see note)		5 VDC 1 mA

Note: For more information on the minimum applicable load, refer to *Using Micro Loads*.

Ratings

Rating voltage	Resistive load
13.5 VDC	10 mA

Note: The rating values apply under the following test conditions.
1. Ambient temperature: 20 ± 2°C
2. Ambient humidity: 65 ± 5%
3. Operating frequency: 20 operations/min

Characteristics

Items		
Operating speed		30 mm to 500 mm/s (pin plunger models)
Operating frequency	**Mechanical**	30 operations/min max.
	Electrical	30 operations/min max
Insulation resistance		100 MΩ min. (at 500 VDC)
Contact resistance (initial value)	**Terminals**	500 mΩ max.
Dielectric strength	**Between same polarity**	500 VAC 50/60 Hz 1min
	Between current carrying metal parts and ground	1,500 VAC 50/60 Hz 1min
	Between each terminal and non-current carrying metal part	1,500 VAC 50/60 Hz 1min
Vibration resistance ✻1	**Malfunction**	10 to 55 Hz, 1.5 mm double amplitude
Shock resistance	**Destruction**	1,000 m/s^2 Max.
	Malfunction ✻1	300 m/s^2 Max.
Durability ✻2	**Mechanical**	200,000 operations Min. (at 30 ops./min.)
	Electrical	200,000 operations Min. (at 20 ops./min.)
Degree of protection		IEC IP67
Ambient operating temperature		-40 to +85°C (at 60% RH Max.) (with no icing or condesenation)
Ambient operation humidity		95%RH max. (for +5 to +35°C)
Heart resistance		85°C 500 hours
Cold resistance		-40°C 500 hours
Humidity resistance		70°C 95% RH 500 hours
Temperature cycle resistance		-40°C (12 hours ⇔ 55°C (12 hours) 5 cycles
Weight		Approx. 0.5g (for pin plunger models with terminals)

Note: The data given above are initial values.

✻1. For the pin plunger models, the above values apply for use at the free position, operating position, and total travel position. For the lever models, they apply at the total travel position. Close or open circuit of the contact is 1ms max.

✻2. For testing conditions, consult your OMRON sales representative.

Mounting Structure and Reference Positions for Operating Characteristics (Unit: mm)

● Side slot/Side slot for leaf lever

D2GW-A/AL□

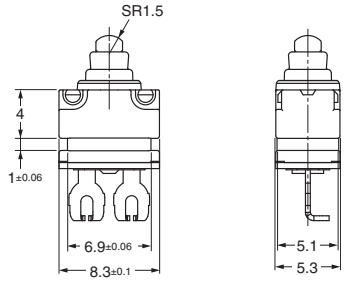

● M3-screw Mounting Models

D2GW-SC□

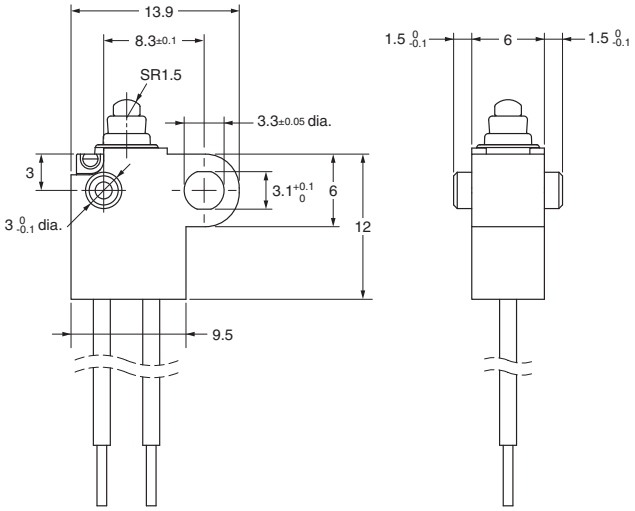

Terminals (Unit: mm)

● PCB terminals

SPST-NO

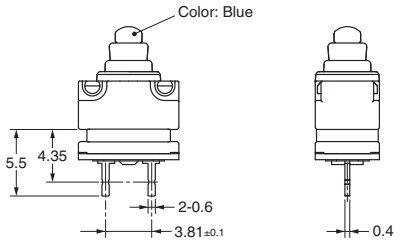

SPST-NC

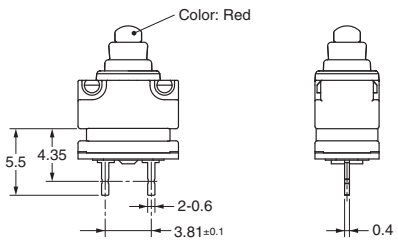

<PCB Mounting Dimensions (Reference)>

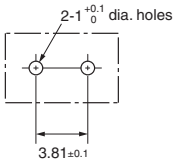

● Solder terminals

SPST-NO

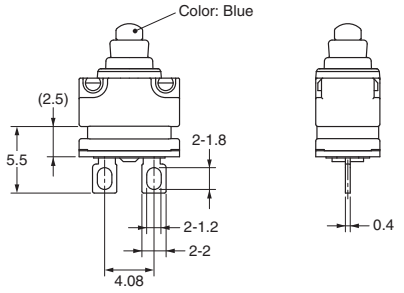

SPST-NC

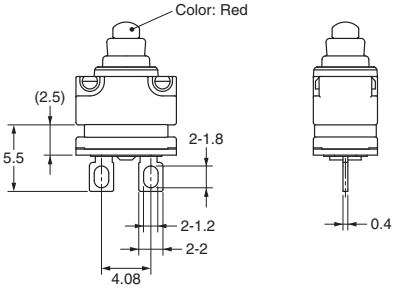

● Press-fit terminals

SPST-NO

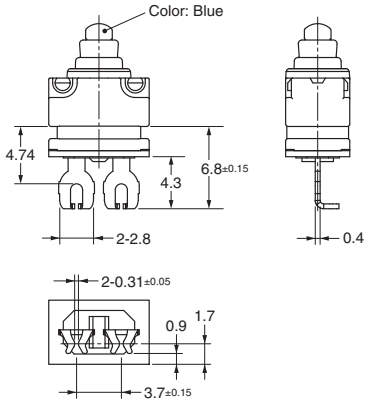

SPST-NC

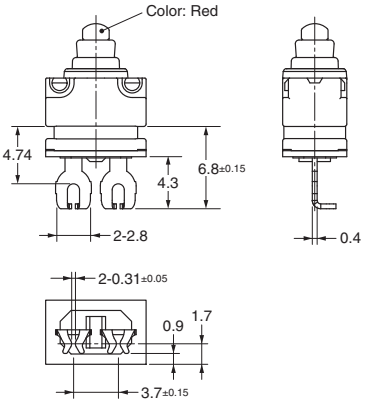

Insertion side unit mounting dimensions (for reference only)

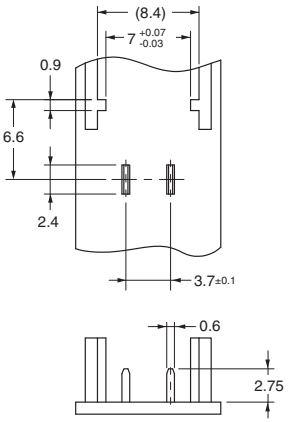

● Molded Lead Wires

SPST-NO

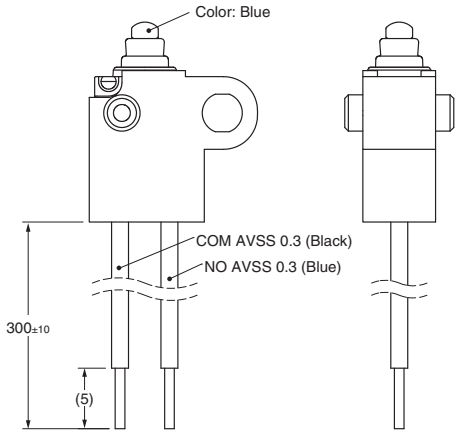

SPST-NC

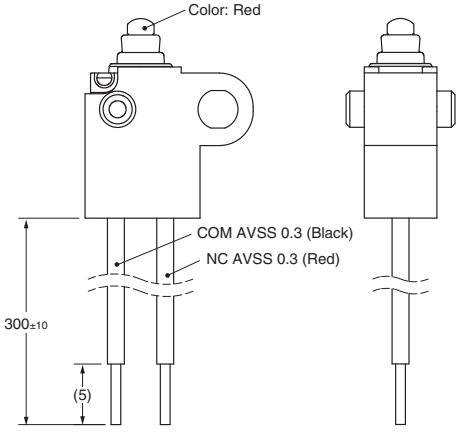

Dimensions (Unit: mm) / Operating Characteristics

The following illustrations and drawings are for solder terminal models. PCB terminal models are omitted from the drawings. Refer to *Terminals* for these terminals. When ordering, replace □ with the code for the rating that you need. For the combination of models, refer to *List of Models*.

● Pin plunger
D2GW-□0□□□

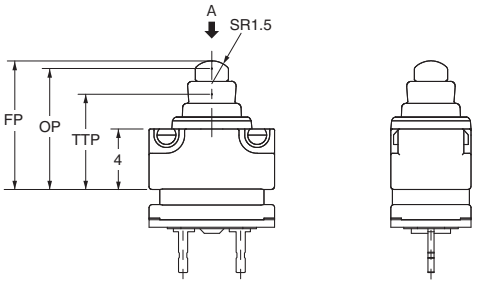

Operating characteristics			Type	Side slot	M3-screw mounting models
Operating Force Releasing Force	OF RF	Max. Min.		1.2 N {122 gf} 0.1 N {10 gf}	
Overtravel Movement Differential	OT MD	 Max.		1.7 mm (reference value) 0.25 mm	
Free Position Operating Position Total Travel Position	FP OP TTP	Max.		8.7 mm 8.0 ±0.3 mm 6.3 mm	7.7 mm 7.0 ±0.35 mm 5.3 mm

●Straight hinge lever
D2GW-□1□□□

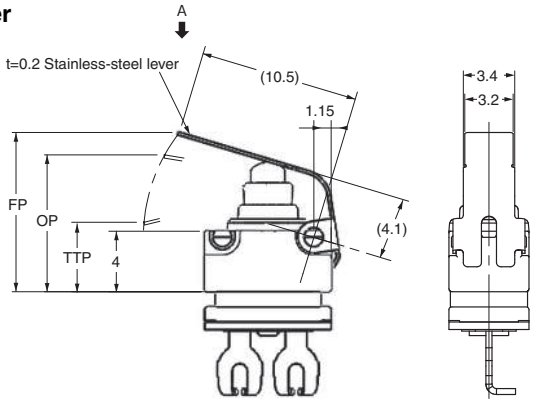

Operating characteristics			Type	Side slot	M3-screw mounting models
Operating Force Releasing Force	OF RF	Max. Min.		0.85 N {87 gf} 0.02 N {2 gf}	
Overtravel Movement Differential	OT MD	 Max.		4.45 mm (reference value) 1.4 mm	
Free Position Operating Position Total Travel Position	FP OP TTP	Max.		11.05 mm 9.05 ±0.75 mm 4.6 mm	10.5 mm 8.05 ±0.75 mm 3.6 mm

●Bent leaf lever
D2GW-□6□□□

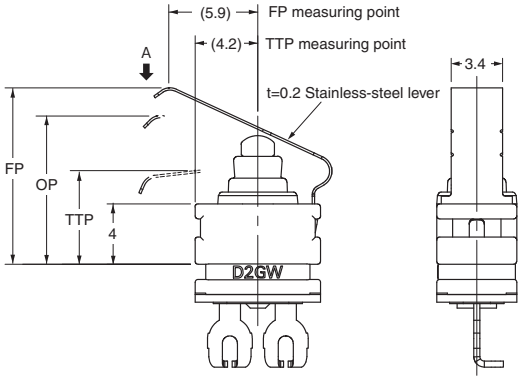

Operating characteristics			Type	Side slot	M3-screw mounting models
Operating Force Releasing Force	OF RF	Max. Min.		1.5 N {153 gf} 0.1 N {10 gf}	
Overtravel Movement Differential	OT MD	 Max.		2.6 mm (reference value) 1.4 mm	
Free Position Operating Position Total Travel Position	FP OP TTP	Max.		12.0 mm 8.8 ±0.8 mm 6.2 mm	11.0 mm 7.8 ±0.8 mm 5.2 mm

Note: 1. Unless otherwise specified, a tolerance of ±0.2 mm applies to all dimensions.
2. The operating characteristics are for operation in the A direction ( ).

Precautions

Please refer to "**Safety Precautions for All Detection Switches**" for correct use.

Cautions

●Degree of Protection

- Do not use this product underwater.
  Although molded lead wire models satisfy the test conditions for the standard given below, this test is to check the ingress of water into the switch enclosure after submerging the Switch in water for a given time. Satisfying this test condition does not mean that the Switch can be used underwater.
  JIS C0920:
  Degrees of protection provided by enclosures of electrical apparatus (IP Code)
  IEC 60529:
  Degrees of protection provided by enclosures (IP Code)
  Degree of protection: IP67
  (check water intrusion after immersion for 30 min. submerged 1m underwater)
- Do not operate the Switch when it is exposed to water spray, or when water drops adhere to the Switch surface, or during sudden temperature changes, otherwise water may intrude into the interior of the Switch due to a suction effect.
- Prevent the Switch from coming into contact with oil and chemicals.
  Otherwise, damage to or deterioration of Switch materials may result.
- Do not use the Switch in areas where it is exposed to silicon adhesives, oil, or grease. Otherwise faulty contact may result due to the generation of silicon oxide.

●Soldering

When soldering the lead wire to the terminal, first insert the lead wire conductor through the terminal hole and then conduct soldering.
Make sure that the temperature of the soldering iron tip does not exceed 300°C, and complete the soldering within 3 seconds. Do not apply any external force for 1 minute after soldering.
Soldering at an excessively high temperature or soldering for more than 3 seconds may deteriorate the characteristics of the Switch.
In case of automatic soldering, please do not apply the heat beyond 260°C within 5 seconds. Pay careful attention so that flux or solder liquid does not flow over the edge of the PCB panel.

●Side-actuated (Cam/Dog) Operation

- When using a cam or dog to operate the Switch, factors such as the operating speed, operating frequency, push-button indentation, and material and shape of the cam or dog will affect the durability of the Switch. Confirm performance specifications under actual operating conditions before using the Switch in applications.

Correct Use

●Mounting

- Turn OFF the power supply before mounting or removing the Switch, wiring, or performing maintenance or inspection. Failure to do so may result in electric shock or burning.
- For M3-screw mounting models, use M3 mounting screws with plane washers or spring washers to securely mount the Switch. Tighten the screws to a torque of 0.27 to 0.29 N·m {27.5 to 29.5 gf}. Exceeding the specified torque may result in deterioration of the sealing or damage.
- For models with posts, secure the posts by pressing into an attached device. Provide guides on the opposite ends of the posts to ensure that they do not fall out or rattle.
- When mounting a Press-fit terminals, press in A (body) and B (terminal) in the drawing below at the same time.
  If A (body) only is pressed in, the Press-fit terminals will be deformed and will not be properly inserted.
  Also, ensure that the Press-fit terminals is facing down when it is inserted.
  Avoid connecting soldered or laser-welded terminals.
  Avoid mounting in conditions exposed to corrosive gases, high temperature and humidity, and dust.

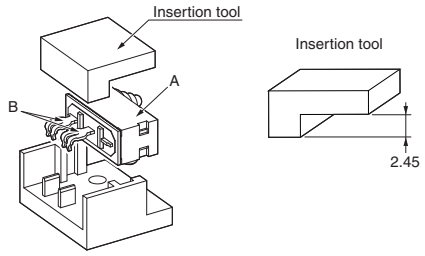

●Operating Body

- Use an operating body with low frictional resistance and of a shape that will not interfere with the sealing rubber, otherwise the plunger may be damaged or the sealing may deteriorate.

●Handling

- Do not handle the Switch in a way that may cause damage to the sealing rubber.
- When handling the Switch, ensure that pressure is not applied to the posts in the directions shown in the following diagram. Also, ensure that uneven pressure or pressure in a direction other than the operating direction is not applied to the Actuator as shown in the following diagram. Otherwise, the post, Actuator, or Switch may be damaged, or the service life may be reduced.

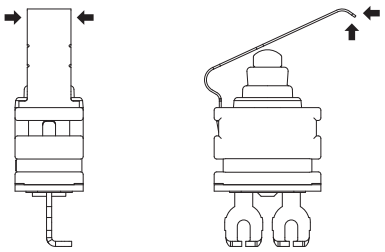

●Wiring Molded Lead Wire Models

- When wiring molded lead wire models, ensure that there is no weight applied on the wire or that there are no sharp bends near the parts where the wire is drawn out.
  Otherwise, damage to the Switch or deterioration in the sealing may result.

●Using Micro Loads

- Even when using micro load models within the operating range, if inrush/surge current occurs, it may increase the contact wear and so decrease durability. Therefore, insert a contact protection circuit where necessary.

Please check each region's Terms & Conditions by region website.

OMRON Corporation

Electronic and Mechanical Components Company

Regional Contact

Americas
https://www.components.omron.com/

Europe
http://components.omron.eu/

Asia-Pacific
https://ecb.omron.com.sg/

China
https://www.ecb.omron.com.cn/

Korea
https://www.omron-ecb.co.kr/

Japan
https://www.omron.co.jp/ecb/

© OMRON Corporation 2021 All Rights Reserved.
In the interest of product improvement, specifications are subject to change without notice.

Cat. No. B148-E1-01
0421(0421)