BF38T4D024

FOUR-POLE CONTACTOR, IEC OPERATING CURRENT ITH (AC1) = 56A, DC COIL, 24VDC



Product designation			Power contactor
Product type designation			BF38
Contact characteristics			
Number of poles		Nr.	4
Rated insulation voltage Ui IEC/EN		V	690
Rated impulse withstand voltage Uimp		kV	6
Operational frequency			
	min	Hz	25
	max	Hz	400
IEC Conventional free air thermal current Ith		A	56
Operational current Ie			
	AC-1 (≤40°C)	A	56
	AC-1 (≤40°C) with 16mm² wire and fork end lug	A	60
	AC-1 (≤55°C)	A	45
	AC-1 (≤55°C) with 16mm² wire and fork end lug	A	48
	AC-1 (≤70°C)	A	40
	AC-1 (≤70°C) with 16mm² wire and fork end lug	A	42
	AC-3 (≤440V ≤55°C)	A	38
	AC-4 (400V)	A	15.5
Rated operational power AC-1 (T≤40°C)			
	230V	kW	21
	400V	kW	36
	500V	kW	45
	690V	kW	62
IEC max current Ie in DC1 with L/R ≤ 1ms with 1 poles in series			
	≤24V	A	35
	48V	A	30
	75V	A	23
	110V	A	8
	220V	A	–
IEC max current Ie in DC1 with L/R ≤ 1ms with 2 poles in series			
	≤24V	A	36
	48V	A	34
	75V	A	29
	110V	A	32
	220V	A	4
IEC max current Ie in DC1 with L/R ≤ 1ms with 3 poles in series			
	≤24V	A	36
	48V	A	34
	75V	A	33
	110V	A	34
	220V	A	30
IEC max current Ie in DC1 with L/R ≤ 1ms with 4 poles in series			
	≤24V	A	36
	48V	A	34

The characteristics described in this document are subject to updates or modifications at any time. The descriptions, technical and functional information, illustrations and instructions in this brochure are purely illustrative, and are consequently not contractually binding

	75V	A	33
	110V	A	34
	220V	A	38
IEC max current Ie in DC3-DC5 with L/R ≤ 15ms with 1 poles in series			
	≤24V	A	24
	48V	A	20
	75V	A	17
	110V	A	2,5
	220V	A	–
IEC max current Ie in DC3-DC5 with L/R ≤ 15ms with 2 poles in series			
	≤24V	A	28
	48V	A	25
	75V	A	22
	110V	A	18
	220V	A	3
IEC max current Ie in DC3-DC5 with L/R ≤ 15ms with 3 poles in series			
	≤24V	A	32
	48V	A	28
	75V	A	28
	110V	A	23
	220V	A	25
IEC max current Ie in DC3-DC5 with L/R ≤ 15ms with 4 poles in series			
	≤24V	A	32
	48V	A	28
	75V	A	28
	110V	A	23
	220V	A	15
Short-time allowable current for 10s (IEC/EN60947-1)		A	320
Protection fuse			
	gG (IEC)	A	63
	aM (IEC)	A	40
Making capacity (RMS value)		A	380
Breaking capacity at voltage			
	440V	A	304
	500V	A	240
	690V	A	192
Resistance per pole (average value)		mΩ	2
Power dissipation per pole (average value)			
	Ith	W	6
	AC3	W	2.9
Tightening torque for terminals			
	min	Nm	2.5
	max	Nm	3
	min	lbin	1.8
	max	lbin	2.2
Tightening torque for coil terminal			
	min	Nm	0.8
	max	Nm	1
	min	lbin	0.8
	max	lbin	0.74
Max number of wires simultaneously connectable		Nr.	2
Conductor section			
AWG/Kcmil			

The characteristics described in this document are subject to updates or modifications at any time. The descriptions, technical and functional information, illustrations and instructions in this brochure are purely illustrative, and are consequently not contractually binding

		max		6
	Flexible w/o lug conductor section			
		min	mm²	2.5
		max	mm²	16
	Flexible c/w lug conductor section			
		min	mm²	1
		max	mm²	10
	Flexible with insulated spade lug conductor section			
		min	mm²	1
		max	mm²	10
Power terminal protection according to IEC/EN 60529				IP20 when properly wired
Mechanical features				
Operating position				
		normal		Vertical plan
		allowable		±30°
Fixing				Screw / DIN rail 35mm
Weight			g	656
Conductor section				
	AWG/kcmil conductor section			
		max		6
Operations				
Mechanical life			cycles	20000000
Electrical life			cycles	1400000
Safety related data				
Performance level B10d according to EN/ISO 13489-1				
		rated load	cycles	1400000
		mechanical load	cycles	20000000
Mirror contats according to IEC/EN 609474-4-1				yes
EMC compatibility				yes
DC coil operating				
DC rated control voltage			V	24
DC operating voltage				
	pick-up			
		min	%Us	70
		max	%Us	125
	drop-out			
		min	%Us	10
		max	%Us	40
Average coil consumption ≤20°C				
		in-rush	W	5.4
		holding	W	5.4
Max cycles frequency				
Mechanical operation			cycles/h	3600
Operating times				
Average time for Us control				
	in AC			
		Closing NO		
			min	ms 8
			max	ms 24
		Opening NO		
			min	ms 5
			max	ms 15

The characteristics described in this document are subject to updates or modifications at any time. The descriptions, technical and functional information, illustrations and instructions in this brochure are purely illustrative, and are consequently not contractually binding

	Closing NC			
		min	ms	9
		max	ms	20
	Opening NC			
		min	ms	9
		max	ms	17
in DC				
	Closing NO			
		min	ms	54
		max	ms	66
	Opening NO			
		min	ms	14
		max	ms	17
UL technical data				
Full-load current (FLA) for three-phase AC motor				
		at 480V	A	40
		at 600V	A	32
Yielded mechanical performance				
for single-phase AC motor				
		110/120V	HP	3
		230V	HP	7.5
for three-phase AC motor				
		200/208V	HP	10
		220/230V	HP	15
		460/480V	HP	30
		575/600V	HP	30
General USE				
Contactor				
		AC current	A	55
Short-circuit protection fuse, 600V				
High fault				
		Short circuit current	kA	100
		Fuse rating	A	100
		Fuse class		J
Standard fault				
		Short circuit current	kA	5
		Fuse rating	A	150
Ambient conditions				
Temperature				
Operating temperature				
		min	°C	-50
		max	°C	70
Storage temperature				
		min	°C	-60
		max	°C	80
Max altitude			m	3000
Resistance & Protection				
Pollution degree				3
Dimensions				

The characteristics described in this document are subject to updates or modifications at any time. The descriptions, technical and functional information, illustrations and instructions in this brochure are purely illustrative, and are consequently not contractually binding

BF38T4D024

FOUR-POLE CONTACTOR, IEC OPERATING CURRENT ITH (AC1) = 56A, DC COIL, 24VDC

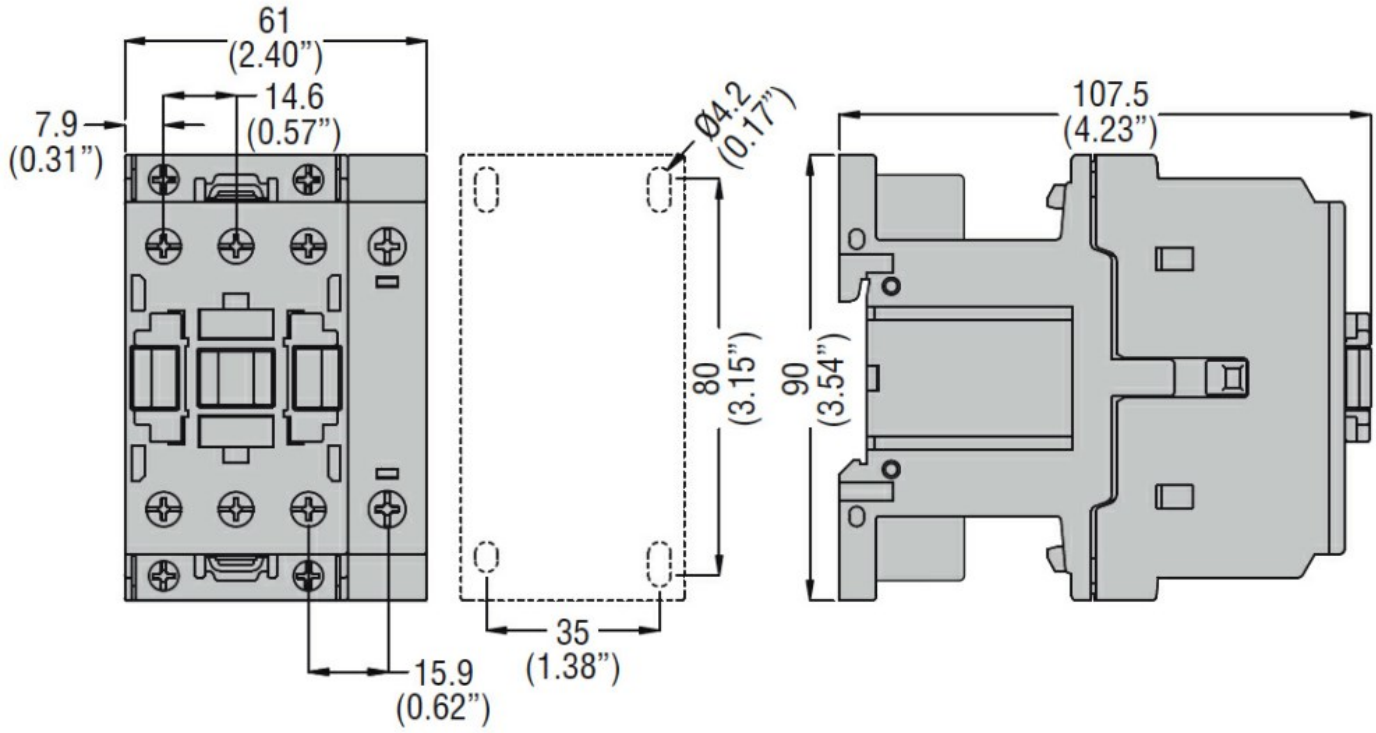

Wiring diagrams

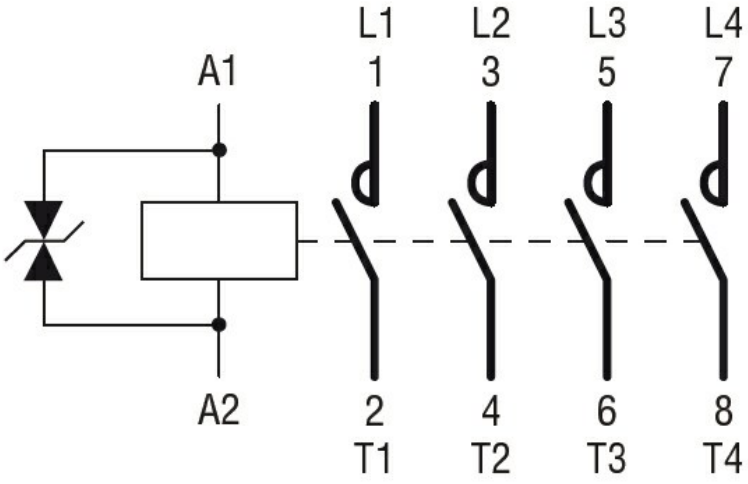

Certifications and compliance

Compliance

CSA C22.2 n° 60947-1
CSA C22.2 n° 60947-4-1
IEC/EN/BS 60947-1
IEC/EN/BS 60947-4-1
UL 60947-1
UL 60947-4-1

Certificates

CCC
cULus
EAC

ETIM classification

The characteristics described in this document are subject to updates or modifications at any time. The descriptions, technical and functional information, illustrations and instructions in this brochure are purely illustrative, and are consequently not contractually binding

ETIM 8.0

EC000066 - Power contactor, AC switching

The characteristics described in this document are subject to updates or modifications at any time. The descriptions, technical and functional information, illustrations and instructions in this brochure are purely illustrative, and are consequently not contractually binding