Micro counters | High shock resistance (AC+DC) | K 04 ... K 07 / AK 07

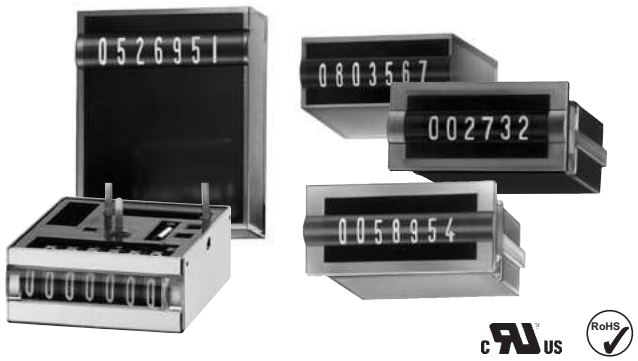

The micro adding counter families K 04 to K 07 and AK 07 are available in a very wide variety of models and can be used in both DC as well as in AC applications.

As panel mount, base mount and PCB mount counters with a very high level of shock resistance they can be used for numerous diverse application areas.

Characteristics

- Low power consumption; suitable for battery operation.
- Very compact size, large optical figures.
- Different viewing possibilities.
- Panel mount counter with moulded spring clips, base mount counter with screw fixing or PCB mount versions.
- Version with additional magnetic shielding thanks to sheet-steel enclosure (K 0X.40 and K 0X.50).

Benefits

- Machine solderable and washable.
- Stores values if power fails.
- High shock resistance, long service life, IP65 protection.

Applications

General quantity counting, alarm systems, coin-operated machines, electricity meters, vending and slot machines, photocopiers, medical equipment, car washes.

Type series

Fig.	*Mounting options*	*Display*	*Housing*	*IP protection*	*4 digits*	*5 digits*	*6 digits*	*7 digits*
1)	Panel mount with latch	front side	plastic	front side	**K 04.20**	**K 05.20**	**K 06.20**	**K 07.20**
2)	PCB mount, lying	on the top	sheet steel	–	**K 04.40**	–	–	**K 07.40**
3)	PCB mount, hanging	front side	sheet steel	–	–	–	–	**K 07.50**
4)	PCB mount, upright	front side	plastic	front side	–	–	**K 06.80**	**K 07.80**
5)	PCB mount, lying	on the top	plastic	front side/on rear	–	–	–	**K 07.90**
6)	Base mount, upright	front side	plastic	front side	–	–	–	**AK 07.00**

Order information
- Art.-No.
- For options please give exact counter type, voltage and options e.g.:
  K 06.20 – 9 V DC/0 – temperature range -20°C ... +70°C [-4°F ... +158°F]

Mounting options and position of the display

1) Panel mount / display front side

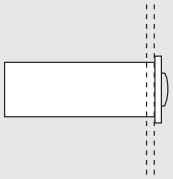

2) PCB mount, lying / display on the top



3) PCB mount, hanging / display front side



4) PCB mount, upright / display front side

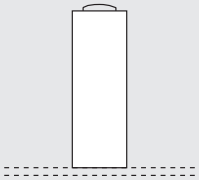

5) PCB mount, lying / display on the top



6) Base mount upright / display front sid

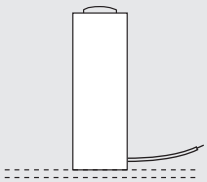

Optional: PCB mount, upright / display front side

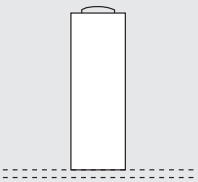

© Fritz Kübler GmbH, subject to errors and changes. 06/2015

Micro counters | High shock resistance (AC+DC) | K 04 ... K 07 / AK 07

Technical data

Electrical connection		
	Panel mount, base mount	flying leads, AWG 22 approx. 150 mm [5.91"], 6 mm [0.24"] stripped wire ends, tinned
	PCB mount	solder pins ø 0.4 x 1.2 mm [0.016 x 0.047"]
Power consumption (at 20°C [68°F] and normal voltage))		
	at 10 Hz (type 0)	approx. 50 mW
	at 25 Hz (type 1)	approx. 250 mW
	at 10 Hz (type a0)	approx. 800 mVA
Rated voltage	type 0	1.5/3/4.5/5/6/12/24 V DC, -10 %, +20 %
	type 1	3/4.5/5/6/12/24 V DC, ±10 %
	type a0	12/24/115/230 V AC, ±10 %
Counting frequency		max. 10 and 25 Hz
Pulse duration		
	at 10 Hz (type 0 and a0)	min. 50 ms
	at 25 Hz (type 1)	min. 20 ms
Pulse interval		
	at 10 Hz (type 0 a0)	min. 50 ms
	at 25 Hz (type 1)	min. 20 ms
Cycle duration factor		100 %
Number of digits		4, 5, 6 and 7
Counting system		adding
Height of figures (optical)	K 04, K 06, AK 06	4 x 1.7 mm [0.16 x 0.067"]
	K 05, K 07, AK 07	4 x 1.2 mm [0.16 x 0.047"]
Colour of figures		white on black
Reset		no reset

Operating temperature		-10°C ... +60°C [+14°F ... +140°F] (non-condensing)
Mounting position		horizontal, other on request
Soldering temperature		265°C [+509°F], 3 s
Operating life		> 50 x 10^6 pulses
Solderable and wash proof types		K 0X.92, K 06.90, K 07.90
Protection	K 0X.92, K 0X.90	IP65
	AK 0X.00, K 0X.80, K 0X.20	IP65 (only front side)
	other types	depending on kind of mounting
UL approval		File E43429
Housing		PC (Polycarbonate), transparent or sheet steel types (see table) with IP65 protection, fully sealed (potted)
Weight		15 ... 18 g [0.53 ... 0.63 oz]

Options

K 0x.20

flat pin 0.5 x 2.8 mm [0,020 x 0.11"] Art.-No.: 1.1X7.XX0.XXX
flat pin 0.4 x 1.2 mm [0,016 x 0.047"] Art.-No.: 1.1X9.XX0.XXX

- different voltages
- version not potted
- different figure colours
- different lengths of flying leads
- different connections
- different temperature range, depends on version
  -30°C ... +85°C [-22°F ... +185°F] or
  -20°C ... +70°C [-4°F ... +158°F]

© Fritz Kübler GmbH, subject to errors and changes. 06/2015

Micro counters | High shock resistance (AC+DC) | K 04 ... K 07 / AK 07

Panel mount counter
4- and 5-digit display front side
Type K 04.20 / K 05.20



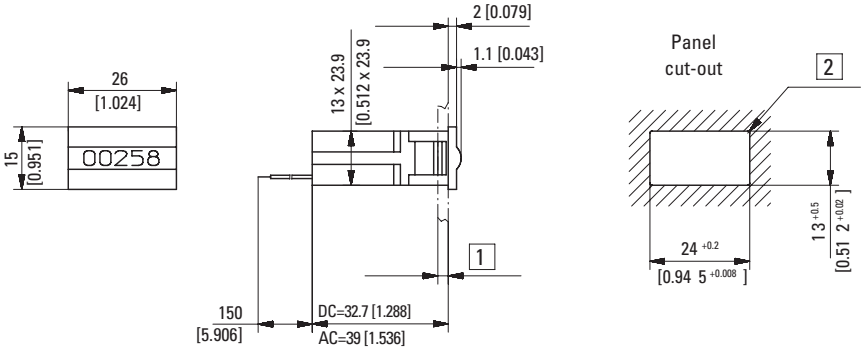

1 1.2 ... 3 [0.047 x 0.12] 2 R_{max} 0.5 [0.020] 3 Coil connections

Type	Voltage	Display	Art.-No. 3 V	4.5 V	12 V	24 V	115 V	230 V
K 04.20	DC (10 Hz) / 0	4 digits	**1.100.200.006**	**1.100.200.008**	**on request**	**on request**		
	DC (25 Hz) / 1				**1.100.200.032**	**1.100.200.033**		
	AC (10 Hz) / a0					**1.100.200.051**	**1.100.200.054**	**1.100.200.056**
K 05.20	DC (10 Hz) / 0	5 digits	**1.110.200.006**	**1.110.200.008**	**on request**	**1.110.200.013** 1)		
	DC (25 Hz) / 1				**1.110.200.032**	**1.110.200.033**		
	AC (10 Hz) / a0					**1.110.200.051**	**1.110.200.054**	**1.110.200.056** 1)

Panel mount counter
6- and 7-digit display front side
Type K 06.20 / K 07.20



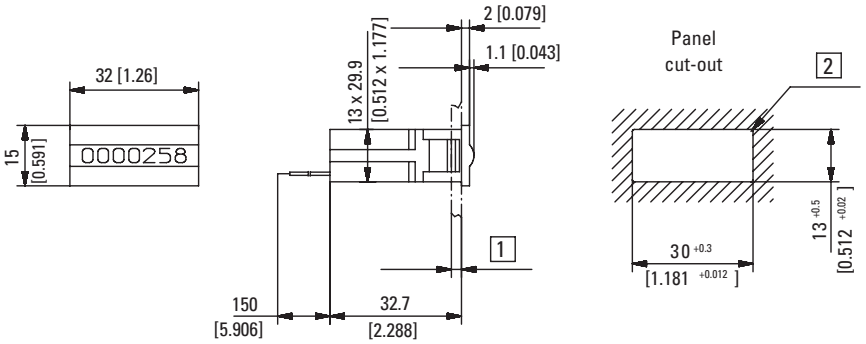

1 1.2 ... 3 [0.047 x 0.12] 2 R_{max} 0.5 [0.020] 3 Coil connections

Type	Voltage	Display	Art.-No. 3 V	4.5 V	12 V	24 V	115 V	230 V
K 06.20	DC (10 Hz) / 0	6 digits	**1.120.200.006**	**1.120.200.008**	**on request**	**1.120.200.013**		
	DC (25 Hz) / 1				**1.120.200.032**	**1.120.200.033**		
	AC (10 Hz) / a0					**1.120.200.051**	**1.120.200.054**	**1.120.200.056**
K 07.20	DC (10 Hz) / 0	7 digits	**1.130.200.006**	**1.130.200.008**	**1.130.200.012** 1)	**1.130.200.013**		
	DC (25 Hz) / 1				**1.130.200.032** 1)	**1.130.200.033** 1)		
	AC (10 Hz) / a0					**1.130.200.051**	**1.130.200.054** 1)	**1.130.200.056**

Dimensions in mm [inch]

1) Stock types

© Fritz Kübler GmbH, subject to errors and changes. 06/2015

Pulse counters, electromechanical

Micro counters | High shock resistance (AC+DC) | K 04 ... K 07 / AK 07

PCB mount, lying
4- digit display on the top
Type K 04.40

Colour of housing blue (zinc-plated)



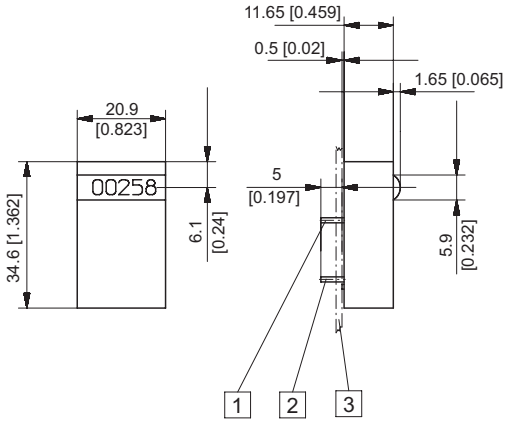

Punching diagram for PCB (component side)

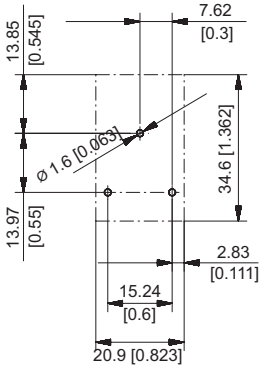

1 Mounting pin without el. function 0.4 x 1.2 [0.016 x 0.047]
2 Coil connections 0.4 x 1.2 [0.016 x 0.047] 3 PCB

Type	Voltage	Display	Art.-No. 3 V	4.5 V	12 V	24 V	
K 04.40	DC (10 Hz) / 0 DC (25 Hz) / 1	4 digits	**1.100.401.006**	**1.100.401.008**	**on request** **1.100.401.032**	**on request** **1.100.401.033**	

PCB mount, lying
7-digit display on the top
Type K 07.40

Colour of housing blue (zinc-plated)

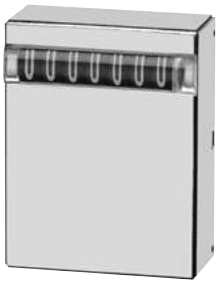

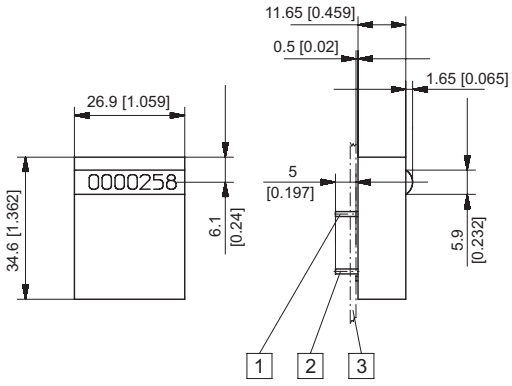

Punching diagram for PCB (component side)

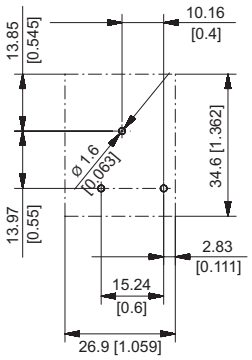

1 Mounting pin without el. function 0.4 x 1.2 [0.016 x 0.047]
2 Coil connections 0.4 x 1.2 [0.016 x 0.047] 3 PCB

Type	Voltage	Display	Art.-No. 3 V	4.5 V	12 V	24 V	
K 07.40	DC (10 Hz) / 0 DC (25 Hz) /1	7 digits	**1.130.401.006**	**1.130.401.008** [1)]	**on request** **1.130.401.032**	**on request** **1.130.401.033**	

Dimensions in mm [inch]

1) Stock types

© Fritz Kübler GmbH, subject to errors and changes. 06/2015

Micro counters | High shock resistance (AC+DC) | K 04 ... K 07 / AK 07

PCB mount, hanging
7-digit display front side
Type K 07.50

Colour of housing blue (zinc-plated)

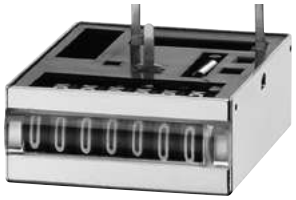

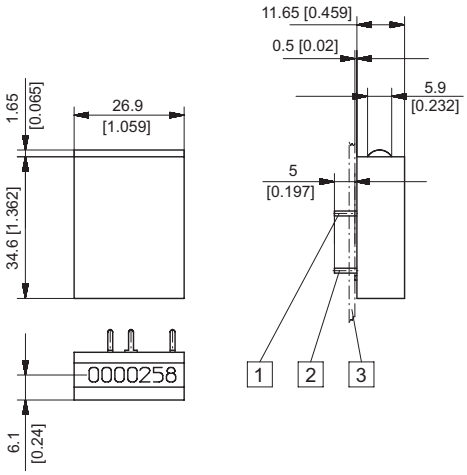

Punching diagram for PCB (component side)

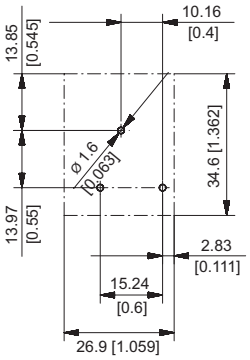

1 Mounting pin without el. function 0.4 x 1.2 [0.016 x 0.047]
2 Coil connections 0.4 x 1.2 [0.016 x 0.047] 3 PCB

Type	Voltage	Display	Art.-No. 3 V	4.5 V	12 V	24 V	
K 07.50	DC (10 Hz) / 0	7 digits	**1.130.501.006**	**1.130.501.008**	**on request**	**on request**	
	DC (25 Hz) / 1				**1.130.501.032**	**1.130.501.033**	

PCB mount, upright
6- and 7-digit display front side
Type K 06.80 / K 07.80



Punching diagram for PCB (component side)

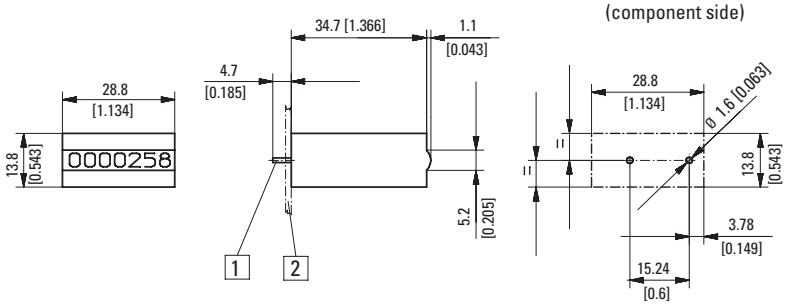

1 Coil connections 0.4 x 1.2 [0.016 x 0.047] 2 PCB

Type	Voltage	Display	Art.-No. 3 V	4.5 V	12 V	24 V	115 V	230 V
K 06.80	DC (10 Hz) / 0	6 digits	**1.120.800.006**	**1.120.800.008**	**on request**	**on request**		
	DC (25 Hz) / 1				**1.120.800.032**	**1.120.800.033**		
	AC (10 Hz) / a0					**1.120.800.051**	**1.120.800.054**	**1.120.800.056**
K 07.80	DC (10 Hz) / 0	7 digits	**1.130.800.006**	**1.130.800.008**	**on request**	**on request**		
	DC (25 Hz) / 1				**1.130.800.032** [1)]	**1.130.800.033**		
	AC (10 Hz) / a0					**1.130.800.051**	**1.130.800.054**	**1.130.800.056**

Dimensions in mm [inch]

1) Stock types

© Fritz Kübler GmbH, subject to errors and changes. 06/2015

Micro counters | High shock resistance (AC+DC) | K 04 ... K 07 / AK 07

PCB mount, lying
7-digit display on the top
Type K 07.90



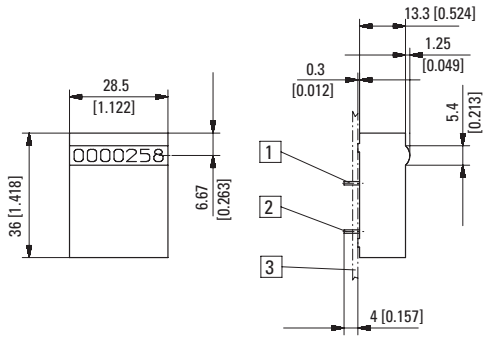

Punching diagram for PCB
(component side)

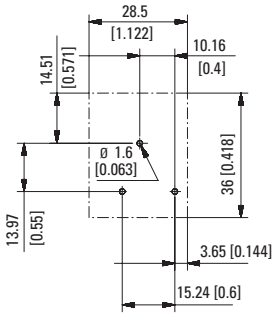

1 Mounting pin without el. function 0.4 x 1.2 [0.016 x 0.047]
2 Coil connections 0.4 x 1.2 [0.016 x 0.047] 3 PCB

Type	Voltage	Display	Art.-No. 3 V	4.5 V	12 V	24 V	115 V	230 V
K 07.90	DC (10 Hz) / 0	7 digits	**1.130.900.006**	**1.130.900.008**	**1.130.900.012** [1]	**on request**		
	DC (25 Hz) / 1				**1.130.900.032**	**1.130.900.033**		
	AC (10 Hz) / a0					**1.130.900.051**	**1.130.900.054**	**1.130.900.056**

Base mount, upright
7-digit display front side
Type AK 07.00



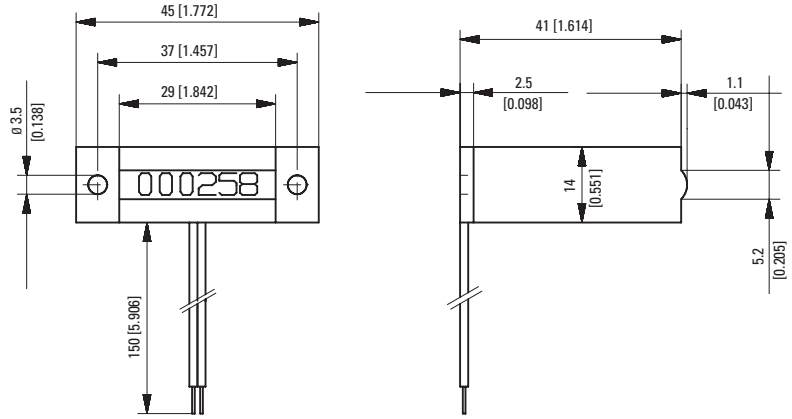

1 Coil connections

Type	Voltage	Display	Art.-No. 3 V	4.5 V	12 V	24 V	115 V	230 V
AK 07.00	DC (10 Hz) / 0	7 digits	**1.130.000.006**	**1.130.000.008**	**1.130.000.012**	**1.130.000.013**		
	DC (25 Hz) / 1				**1.130.000.032**	**1.130.000.033**		
	AC (10 Hz) / a0					**1.130.000.051**	**1.130.000.054**	**1.130.000.056** [1]

Dimensions in mm [inch]

1) Stock types

© Fritz Kübler GmbH, subject to errors and changes. 06/2015