

Enclosed load break switches

Load break switches

SIRCO and SIRCO M from 16 to 1250 A



coff_337_a_1_cat

SIRCO M
in polycarbonate enclosure



coff_292_a_1_cat

SIRCO
in polyester enclosure



coff_295_a_1_cat

SIRCO
steel enclosure
with front operation

The solution for

- OEM
- Industries
- Commercial buildings
- Electrical distribution



Strong points

- Maintenance safety
- Robust product
- Compact

Compliance with standards

- IEC 60947-3
- IEC 60364
- EN 60947-3
- EN 61439
- EN 60204-1
- UL 508
  (depending on model)

Other products

- Customised solutions available on request

Function

SIRCO M and **SIRCO enclosures** incorporate three or four pole manually operated load break switches which make and break on load and provide isolation for any low voltage electrical circuit. The enclosure provides protection against contact with live parts as well as environmental factors such as dust, water and other hazards.

Advantages

- This enclosure range is provided with SIRCO (M) load break switches which are adapted for use with highly inductive loads (AC23).
- The range is available in several variations depending on the rating, number of poles and enclosure type.

SIRCO M in polycarbonate enclosure

Front operation



coff_337_a_1_cat

General characteristics

- Equipped with a 3-pole SIRCO M.
- 1 removable neutral terminal and 1 removable earth terminal.
- Possibility of adding 1 additional pole.
- Possibility of adding 1 M-type auxiliary contact module.
- IP65 protection.

References

Equipped enclosures

Rating (A)	No. of poles	Handle colour	Enclosure colour	Reference
16	3 P	Black	Grey	2215 **3300**
16	3 P	Red	Yellow	2215 **3400**
20	3 P	Black	Grey	2215 **3301**
20	3 P	Red	Yellow	2215 **3401**
25	3 P	Black	Grey	2215 **3302**
25	3 P	Red	Yellow	2215 **3402**
32	3 P	Black	Grey	2215 **3303**
32	3 P	Red	Yellow	2215 **3403**
40	3 P	Black	Grey	2215 **3304**
40	3 P	Red	Yellow	2215 **3404**
63	3 P	Black	Grey	2215 **3306**
63	3 P	Red	Yellow	2215 **3406**
80	3 P	Black	Grey	2215 **3308**
80	3 P	Red	Yellow	2215 **3408**
100	3 P	Black	Grey	2215 **3309**(1)
100	3 P	Red	Yellow	2215 **3409**(1)

Empty enclosures

Rating (A)	No. of poles	Handle colour	Enclosure colour	Reference
16 … 40	3 P	Black	Grey	2215 **9305**
16 … 40	3 P	Red	Yellow	2215 **9405**
63 … 80	3 P	Black	Grey	2215 **9309**
63 … 80	3 P	Red	Yellow	2215 **9409**

(1) Excluding UL.

Dimensions

SIRCO M 16 to 40 A

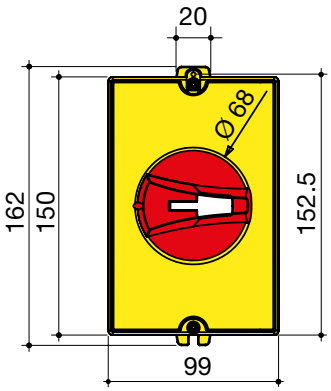

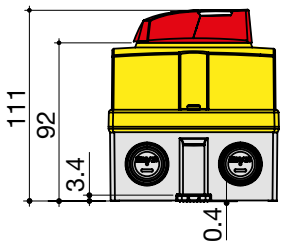

sircm_130_c_1_cat

For enclosure 162 x 99 mm

- 4 pre-drilled M16 holes (on the side).
- 4 pre-drilled M20 / M25 holes (top and bottom).
- 4 pre-drilled M20 holes (rear).

SIRCO M 63 to 100 A

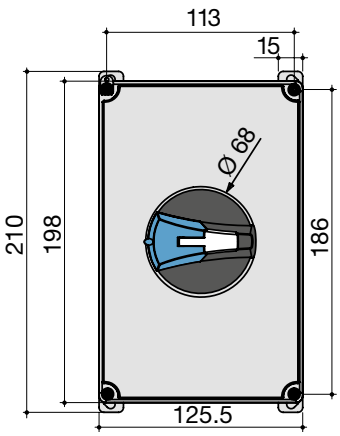

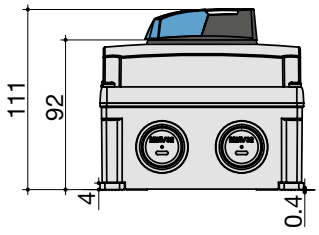

sircm_131_b_1_cat

For enclosure 210 x 125.5 mm

- 4 pre-drilled M16 holes (on the side).
- 4 pre-drilled M25 / M32 holes (top and bottom).
- 2 pre-drilled M25 / M32 holes (rear).

Enclosed load break switches

Load break switches

SIRCO and SIRCO M from 16 to 1250 A

SIRCO in polyester enclosure

Front operation

coff_292_a_2_cat



General characteristics

- Suitable for environments prone to chemical attack, dust hazards, risk of contamination and atmospheric corrosion.
- Operating handle:
  S-type black padlockable handle.
- Degree of protection: IP55.
- Colour: RAL 7030.
- Cable gland plate: none.
- Material: glass fibre reinforced polyester.
- Coating: none.
- Wall-mounted: 4 mounting brackets, supplied not fitted.
- Locking system: screws

References

Rating (A)	No. of poles	Top/Bottom connection Reference[1]	Bottom/Bottom connection Reference[1]
125	3 P	3115 **3012**	3125 **3012**
125	4 P	3115 **4012**	3125 **4012**
160	3 P	3115 **3016**	3125 **3016**
160	4 P	3115 **4016**	3125 **4016**
250	3 P	3115 **3025**	3125 **3025**
250	4 P	3115 **4025**	3125 **4025**
400	3 P	3115 **3040**	3125 **3040**
400	4 P	3115 **4040**	3125 **4040**
500	3 P	3115 **3050**	3125 **3050**
500	4 P	3115 **4050**	3125 **4050**

(1) For a fuse switch version, please contact us.

Dimensions

coff_114_d_1_gb_cat

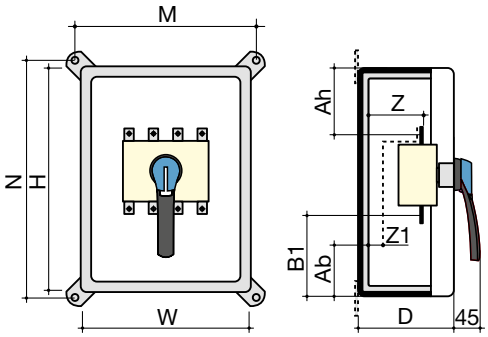

Rating (A)	H x W x D (mm)	Cable cross-section max. (mm²)	M (mm)	N (mm)	Z (mm)	Z1 (mm)	Top/Bottom connection Ah (mm)	Top/Bottom connection B1 (mm)	Top/Bottom connection Weight (kg)	Bottom/Bottom connection Ab (mm)	Bottom/Bottom connection B1 (mm)	Bottom/Bottom connection Weight (kg)
125	360 x 270 x 171	50	271	361	33		120	126	5			
125	360 x 270 x 201	50	271	361	62	28				166	205	6
160	360 x 270 x 171	95	271	361	33		120	126	5			
160	360 x 270 x 201	95	271	361	62	28				166	205	6
250	540 x 360 x 171	150	361	541	35		200	210	8			
250	540 x 360 x 201	150	361	541	55	25				279	360	10
400	720 x 540 x 201	240	541	721	42		258	258	18	316	433	23
500	720 x 540 x 201	240	541	721	51	38	258	258	18	316	433	24

socomec Innovative Power Solutions

SIRCO steel enclosure with front operation

Front operation

coff_295_a_1_cat



General characteristics

- Adapted to mechanical risk and dust hazard.
- Operation handle: S-type black padlockable handle.
- Protection degree: IP55 / IK 10.
- Colour: RAL 7032.
- Cable gland plate: top and bottom.
- Material: XC steel, thickness 1.5 to 2 mm.
- Coating: epoxy polyester powder.
- Wall mounting: 4 holes in the back of the enclosure.
- Door: solid with hinges.
- Locking system: 3 mm double-bar key (key supplied).
- Miscellaneous: 2 earth connection points, disconnectable solid neutral link for 3+N, extension boxes for top and/or bottom connections available, IP20 incoming terminal shrouds.
- Please consult us.