PROPORTIONAL SOLENOID VALVES
POSIFLOW

direct operated, normally closed
1/4

NC 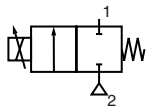

2/2
Series
202

FEATURES

- *Solenoid valves comply with all applicable EC Directives*
- *Variable flow, proportional to the input control signal*
- *Valves do not require a minimum operating pressure*
- *Valves can be mounted in any position*

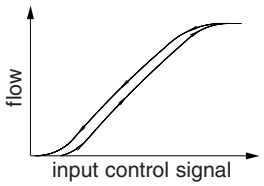



GENERAL

Differential pressure	See "SPECIFICATIONS" [1 bar = 100 kPa]
Maximum allowable pressure	35 bar
Maximum viscosity	21 cSt (mm²/s)

fluids (∗)	temperature range (TS) (1)	sealings (∗)
air, inert gas, water, light oil	-10 to +90°C	FPM (fluorelastomer / viton)

MATERIALS IN CONTACT WITH FLUID

(∗) Verify the compatibility of fluid with materials in contact

	Brass body	Stainless steel body
Body	Brass	AISI 303SS
Core tube, Springs	Stainless steel	Stainless steel
Core and plugnut	Stainless steel	Stainless steel
Riderring	PTFE (teflon)	PTFE (teflon)
Seat	Brass	Stainless steel
Sealing, Disc	FPM	FPM
Breaker piece	Brass	Stainless steel

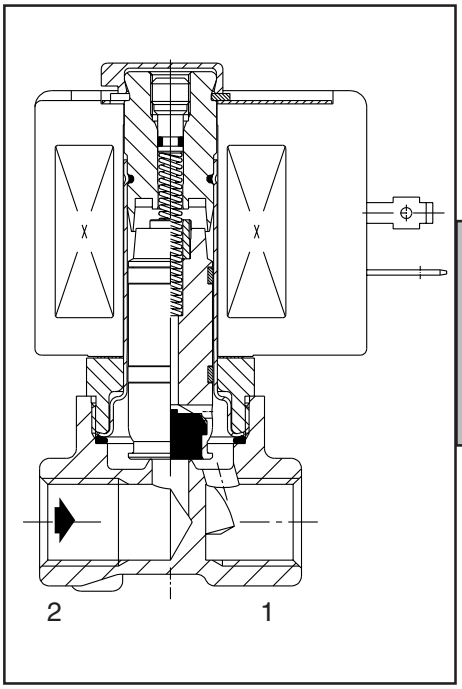

ELECTRICAL CHARACTERISTICS

Coil insulation class	F	F
Connector	Spade plug (Pg 11P)	Spade plug (Pg 11P)
Connector specification	ISO 4400	ISO 4400
Electrical safety	IEC 335	IEC 335
Standard voltages	DC (=) : 24V (Other voltages available on request.)	

coil type	operating current	power rating hot / cold =	ambient temperature range (TS) (1)	protection
	(mA)	(W)	(°C)	
CMXX-F	100 - 500	11 / 8	-10 to +75	moulded IP65

Voltage regulation	0 - 24 V DC 24 V DC pulse width modulated (300 Hz)
Flow regulation characteristics (2)	Hysteresis <5%; Repeatability <3%; Sensitivity <2%

SPECIFICATIONS

pipe size	orifice size	flow coefficient Kv		operating pressure differential (bar)					catalogue number	
				min.	maximum					
					vacuum	air (∗)	water (∗)	light oil (∗)		
	(mm)	(m³/h)	(l/min)		=	=	=	=	air/gas	liquids
G	**Brass body, FPM sealings and discs**									
1/4	1,2	0,05	0,8	0	1	16	16	16	**SC G202A001 V**	**SC G202A051 V**
	2,4	0,12	2	0	1	8	8	8	**SC G202A002 V**	**SC G202A052 V**
	3,2	0,24	4	0	1	4	4	4	**SC G202A003 V**	**SC G202A053 V**
	4	0,42	7	0	1	2,5	2,5	2,5	**SC G202A004 V**	**SC G202A054 V**
	5,6	0,72	12	0	1	1,4	1,4	1,4	**SC G202A006 V**	**SC G202A056 V**
	7,1	0,9	15	0	1	1	1	1	**SC G202A007 V**	**SC G202A057 V**
NPT	**Stainless steel body, FPM sealings and discs**									
1/4	1,2	0,05	0,8	0	1	16	16	16	**SC B202A011 V**	**SC B202A061 V**
	2,4	0,12	2	0	1	8	8	8	**SC B202A012 V**	**SC B202A062 V**
	3,2	0,24	4	0	1	4	4	4	**SC B202A013 V**	**SC B202A063 V**
	4	0,42	7	0	1	2,5	2,5	2,5	**SC B202A014 V**	**SC B202A064 V**
	5,6	0,72	12	0	1	1,4	1,4	1,4	**SC B202A016 V**	**SC B202A066 V**
	7,1	0,9	15	0	1	1	1	1	**SC B202A017 V**	**SC B202A067 V**

(1) Damage may occur when liquids solidify above the specified minimum temperature.
(2) Percentage of max. value with 24 V DC, P.W.M., 300 Hz voltage supply at constant ΔP

The codes in the grey shaded areas correspond to commonly used products which can be supplied rapidly

OPTIONS

- Valves can also be supplied with NBR (nitrile / buna-n), EPDM (ethylene-propylene), CR (chloroprene / neoprene) and PTFE (teflon) sealings and discs
- Waterproof enclosure with embedded screw terminal coil and Pg 13,5 cable gland to meet CEE-10 (IP67)
- Explosionproof enclosures EEx **m** (series PV), EEx **em** (series EM) for hazardous locations according to "**CENELEC**" and national standards (see section 10)
- Explosionproof and watertight enclosures according to "**NEMA**" standards (see section 10)
- Mounting brackets
- Electronic proportional control unit (series **E908A001**, see V150):
  Features:
  - input control signals: analog: 0 - 10 V DC, 0 - 20 mA or 4 - 20 mA
  - adjustable coil current (= flow rate) at required control signals
  - switch-off function at less than 2% of the maximum control function
  - adjustable ramp control
  - Adjustable frequency
  - output current independent of coil resistance and supply voltage variations
  - housed in: a box with spade plug connector according to ISO 4400 / IP65

INSTALLATION

- The valves can be mounted in any position without affecting operation
- Brass valves have two mounting holes
  Stainless steel valves are supplied with mounting bracket
- Threaded pipe connections are standard : G (ISO 228/1) brass and B : NPT (ANSI 1.20.3) stainless steel
- The third digit in the catalogue number indicates the standard pipe connection
- Other pipe connections are available on request
- Installation/maintenance instructions are included with each valve
- Replacement coils are available (see section 11)

DIMENSIONS (mm), WEIGHT (kg)

brass body

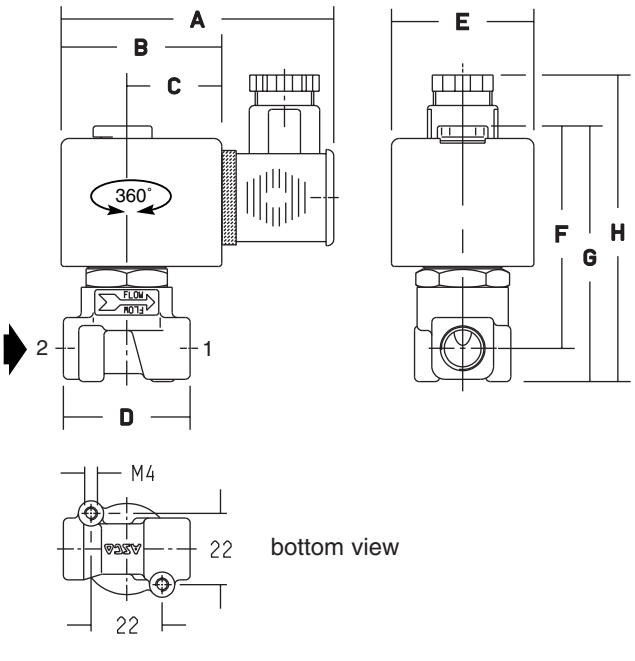

bottom view

stainless steel body

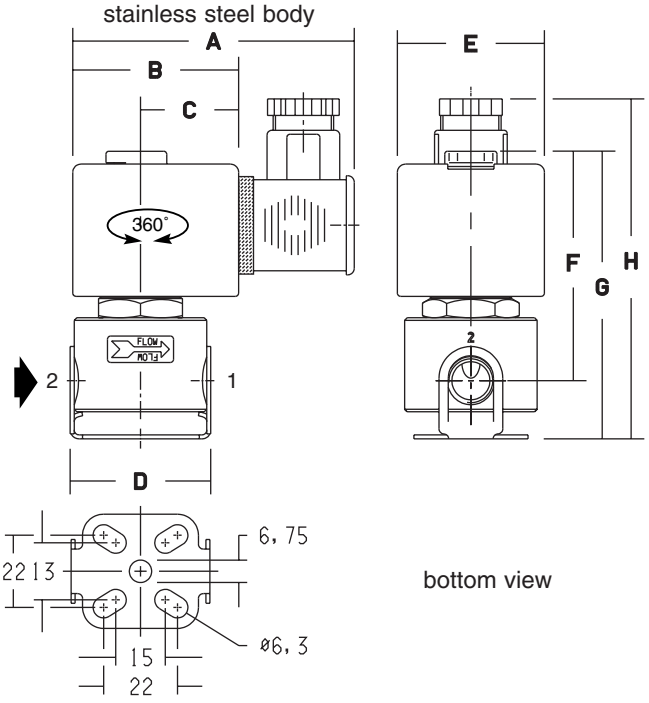

bottom view

catalogue number 202A (1/4)	A	B	C	D	E	F	G	H	weight (1)
Brass	85	50	30	40	45	60	80	95	0,45
Stainless steel	80	50	30	40	45	60	79	94	0,45

(1) Coil and connector included

R0 - ASCO/JOUCOMATIC reserves the right to alter the availability, design and specifications without notice.