TAD081

Temperature transmitter with drift detection

TAD050KLEM01-A-ZKG/US

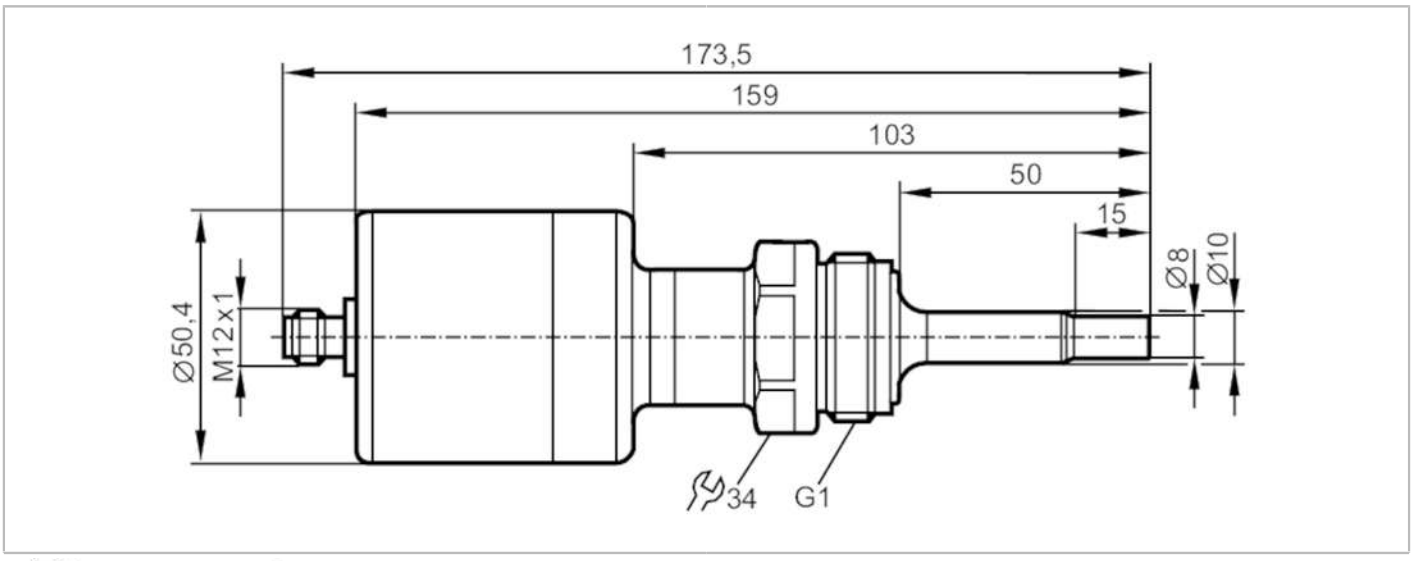

3A CE CRN cULus LISTED EC 1935/2004 EHEDG Certified FCM FDA IO-Link

Product characteristics			
Number of inputs and outputs		Number of digital outputs: 1; Number of analogue outputs: 1	
Measuring range		-25...160 °C	-13...320 °F
Communication interface		IO-Link	
Process connection		threaded connection G 1 external thread Aseptoflex Vario	
Installation length EL	[mm]	50	
Application			
Special feature		Gold-plated contacts	
Measuring element		1 x Pt 1000 + 1 x NTC; (thermically coupled, with backup function (temperature measuring even if one element fails))	
Media		liquids and gases	
Pressure rating		50 bar	5 MPa
Minimum installation depth	[mm]	25	
MAWP (for applications according to CRN)	[bar]	50	
Electrical data			
Operating voltage	[V]	18...32 DC; ("supply class 2" to cULus)	
Current consumption	[mA]	6; (24 V)	
Protection class		III	
Reverse polarity protection		yes	
Power-on delay time	[s]	8	
Integrated watchdog		yes	
Inputs / outputs			
Number of inputs and outputs		Number of digital outputs: 1; Number of analogue outputs: 1	
Outputs			
Total number of outputs		2	
Output signal		switching signal; analogue signal; IO-Link; (configurable)	
Electrical design		PNP/NPN	

TAD081

Temperature transmitter with drift detection

TAD050KLEM01-A-ZKG/US

Number of digital outputs		1	
Output function		normally open / normally closed / diagnostic signal; (parameterisable)	
Max. voltage drop switching output DC	[V]	2	
Permanent current rating of switching output DC	[mA]	150; (200 (...60°C); 250 (...40 °C))	
Diagnostic output		Drift monitoring; fault monitoring	
Number of analogue outputs		1	
Analogue current output	[mA]	4...20	
Max. load	[Ω]	(Ub - 15 V) x 50	
Short-circuit protection		yes	
Type of short-circuit protection		pulsed	
Overload protection		yes	
Measuring/setting range			
Probe length L	[mm]	50	
Measuring range		-25...160 °C	-13...320 °F
Note on measuring range		scalable	
Factory setting		0...150 °C / 32...302 °F	
Drift warning		0.2...5 °C	0.4...9 °F
Drift alarm		0.2...5 °C	0.4...9 °F
In steps of		0.05 °C	0.1 °F
Resolution			
Resolution of analogue output	[K]	0.05	
Accuracy / deviations			
Precision analogue output	[K]	± 0,2 (-10...130°C); ± 0,3 (130...140°C); ± 0,3 ± 0,1% MS (-25...-10/140...160°C); (probe completely inserted into the measured medium up to the sealing chamfer)	
Temperature coefficient [% of the span / 10 K]		< ± 0,01; (in case of deviation from the reference condition 25 ± 5 °C)	
Response times			
Dynamic response T05 / T09	[s]	3 / 6	
Software / programming			
Parameter setting options		drift warning/drift alarm threshold; Fail-Safe; Display unit; scaling of the analogue output; redundancy switching; performance diagnostic output; switching logic; normally open / normally closed	
Interfaces			
Communication interface		IO-Link	
Transmission type		COM1 (4,8 kBaud)	
IO-Link revision		1.1	
SDCI standard		IEC 61131-9 CDV	
Profiles		Smart Sensor: Process Data Variable; Device Identification, Device Diagnosis	
SIO mode		yes	
Required master port type		A	
Process data analogue		1	
Process data binary		1	

TAD081

Temperature transmitter with drift detection

TAD050KLEM01-A-ZKG/US

Min. process cycle time	[ms]	18.8	
Supported DeviceIDs		**Type of operation**	**DeviceID**
		default	323
Operating conditions			
Ambient temperature	[°C]	-25...70	
Storage temperature	[°C]	-40...85	
Protection		IP 68; IP 69K	
Tests / approvals			
EMC		DIN EN 61000-6-2	
		DIN EN 61000-6-3	
Shock resistance		DIN EN 68000-2-27	50 g (11 ms)
Vibration resistance		DIN EN 60068-2-6	20 g (10...2000 Hz)
MTTF	[years]	213	
Note on approval		Including free 5-point calibration certificate.	
Mechanical data			
Weight	[g]	402.5	
Housing		cylindrical	
Dimensions	[mm]	Ø 50.4 / L = 173.5	
Materials		stainless steel (316L/1.4435); stainless steel (316L/1.4404); PEI; FKM	
Materials (wetted parts)		stainless steel (316L/1.4435); stainless steel (316L/1.4404)	
Process connection		threaded connection G 1 external thread Aseptoflex Vario	
Surface characteristics Ra/Rz of the wetted parts		Ra: < 0.6	
Probe diameter	[mm]	10	
Installation length EL	[mm]	50	
Remarks			
Remarks		MS = set measuring span	
Pack quantity		1 pcs.	

Electrical connection

Connector: 1 x M12; coding: A; Contacts: gold-plated



TAD081

Temperature transmitter with drift detection

TAD050KLEM01-A-ZKG/US

Connection

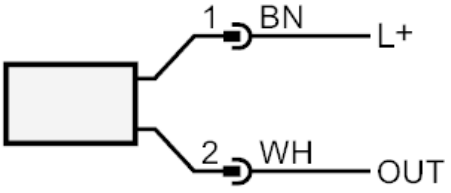

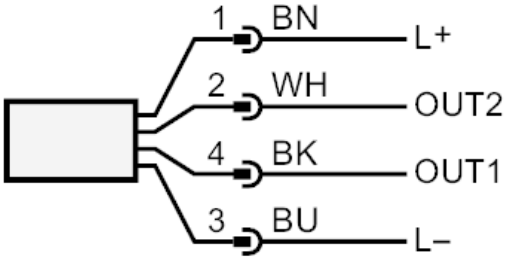

	connection for 2-wire operation
OUT:	analogue output
	connection for 3-wire operation
OUT2:	analogue output
OUT1:	diagnosis / IO-Link

Diagrams and graphs

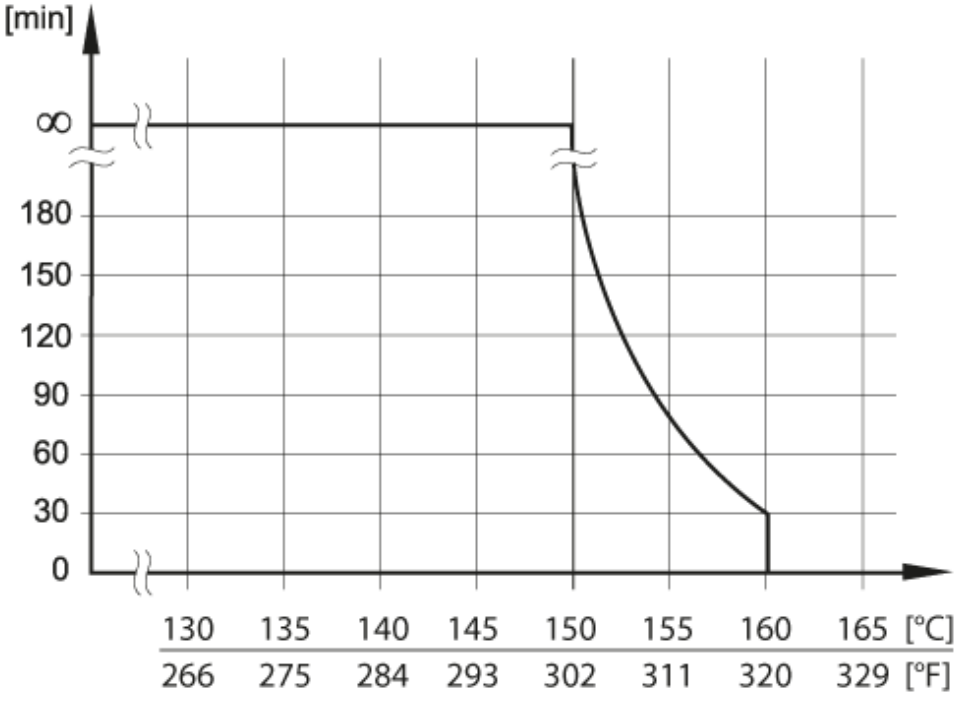

maximum operating time depending on the medium temperature