multimec®

Cap range with variable heights and illumination options

5E/5G + 1SS/1IS/1LS



- Round caps
- 9 standard options in overall height
- Ø6.5 mm
- h =8-22.5 mm; 10.4-22.5 mm; 12-22.5 mm
- Material: polyamide
- Temp. Range:
  - Solid cap: -40/+160°C (1SS); -40/+65°C (1LS)
  - Transparent cap: -40/+85°C
- Panel cut-out: 1SS/1LS/1IS-Ø7.0

All dimensions in mm

DIMENSIONS

SMD + 1SS

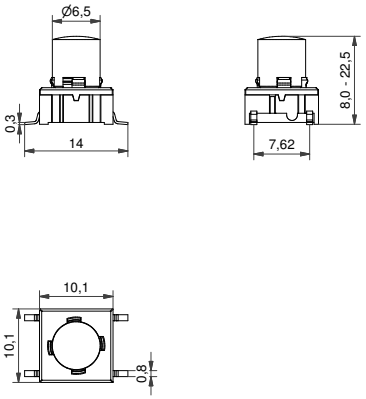

TH w/LED + 1LS

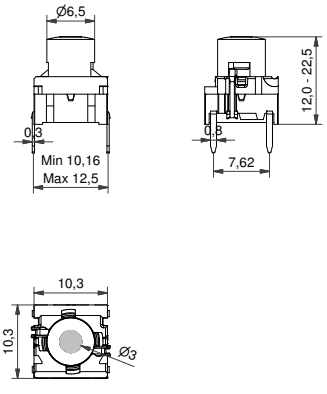

SMD w/LED + 1IS

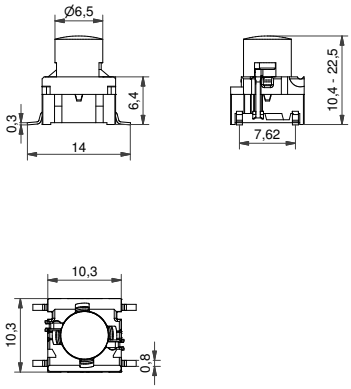

ILLUMINATED – HOW TO ORDER

Switch	Mounting	Actuation force	LED		Cap	Colour code	Lens	Height 1LS
5 G				+				.
	TH9 through-hole	**20**	**01** blue		**1LS** with lens	**00** blue	**1** transparent	**12.0** **19.0**
	SH9 surface mount	**35**	**22** green			**03** grey	**2** green	**15.0** **22.5**
		65	**42** yellow			**08** red	**4** yellow	**16.0**
		Q*	**61** white		**1IS** transparent	**09** black	**6** frosted white	Height 1IS
			82 red			**11** transparent	**8** red	**10.4** **16.0**
			2242 green/yellow			**16** frosted white		**11.0** **19.0**
			8222 red/green					**12.0** **22.5**
			8242 red/yellow					**15.0**

*For an illuminated quiet 2.0N switch add Q to the end of the switch part number.

NON-ILLUMINATED– HOW TO ORDER

Switch	Mounting	Actuation force		Cap	Colour code	Height	
5 E			+			.	
5 G	**TH9** through-hole	**20**		**1SS** solid colour	**00** blue	**08.0**	**16.0**
	SH9 surface mount	**20Q**			**02** green	**09.5**	**19.0**
		35			**03** grey	**10.4**	**22.5**
		65			**04** yellow	**11.0**	
					06 white	**12.0**	
					08 red	**15.0**	
					09 black		

Ordering example:
5ETH920+1SS0409.5 without illumination OR 5GSH93542+1IS1619.0 with illumination OR *5GTH9208222Q (illuminated quiet version)
Please see colour codes, updates of products and changes of specifications on www.mec.dk