Plastic-bodied compact limit switches

Combi C2

For confined spaces
With two mounting options
Protection class IP 30
Hinged snap lid

- Compact switches for safety or control applications
- 3 different contact configurations available as slow-action and snap-action
- All normally-closed contacts are positive break ⊖
- Two channel safety control possible
- Galvanically isolated terminals, type Zb
- Approvals UL, CSA
- Rectangular cable entries (8.5 x 3.5 mm) for 4 x 1-mm² flexible lead
- 4 screw-type connections (M3,5) with self-lifting clamps
- PBT enclosure, glass-fibre reinforced, self-extinguishing UL 94-V0
- Lid, PC UL 94-V0
- 2 mm contact opening of slow-action system according to EN 81-1 for lift applications



Mounting

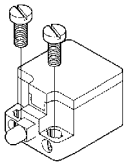

a) 2 holes for M4 screws

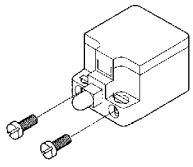

b) 2 captive M3 nuts for end mounting (depending on type)

Designation
Part number
Switching diagram
⊖ positive break according to IEC 947-5-1 Chap. 3
Za: changeover contact is not galvanically isolated
Zb: changeover contact is galvanically isolated
Slow-action contact/snap-action contact
Gasket inside (iw)/outside (w)

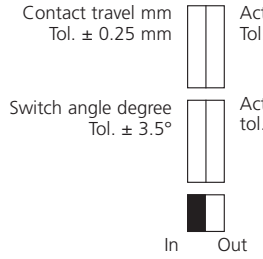

Voltage	max.
Continuous current	max.
Making current, acc. to IEC 947-5-1 AC 15/DC 13	
Switching frequency	max.
Mech. operational life – number of switching cycles	
Ambient temperature	min./max.
Approvals	
Weight	
Delivery: ex-stock/built to order	

Further switching functions

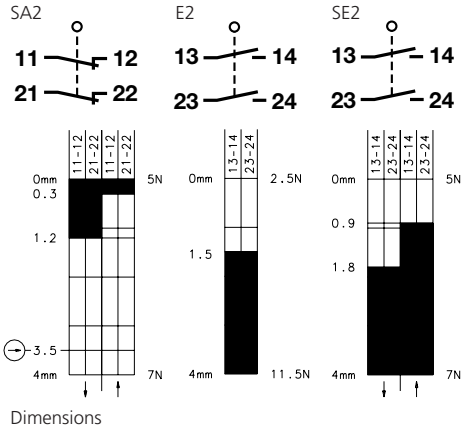

Dimensions
All dimensions in mm

Contact configuration

Switching element	Switch function	Switch contact	Designation	Voltage	Continuous current
Slow-action	changeover	1NC/1NO	U1Z	250 V	10 A
Snap-action	changeover	1NC/1NO	SU1Z	250 V	10 A
Slow-action	normally-closed	2NC	A2Z	250 V	10 A
Snap-action	normally-closed	2NC	SA2Z	250 V	10 A
Slow-action	normally-open	2NO	E2	250 V	10 A
Snap-action	normally-open	2NO	SE2	250 V	10 A





C2-U1Z	C2-SU1Z	C2-A2Z	C2-U1Z St	C2-SU1Z St	C2-A2Z St	C2-U1Z K	C2-SU1Z K	C2-A2Z K
600.8101.001	**600.8351.002**	**600.8801.003**	**600.8104.025**	**600.8354.026**	**600.8804.027**	**600.8107.019**	**600.8357.020**	**600.8807.021**
11–12, 23–24	13–14, 21–22	11–12, 21–22	11–12, 23–24	13–14, 21–22	11–12, 21–22	11–12, 23–24	13–14, 21–22	11–12, 21–22
⊖ Zb	⊖ Zb	⊖ Zb	⊖ Zb	⊖ Zb	⊖ Zb	⊖ Zb	⊖ Zb	⊖ Zb
●/–	–/●	●/–	●/–	–/●	●/–	●/–	–/●	●/–
–/–	–/–	–/–	–/–	–/–	–/–	–/–	–/–	–/–

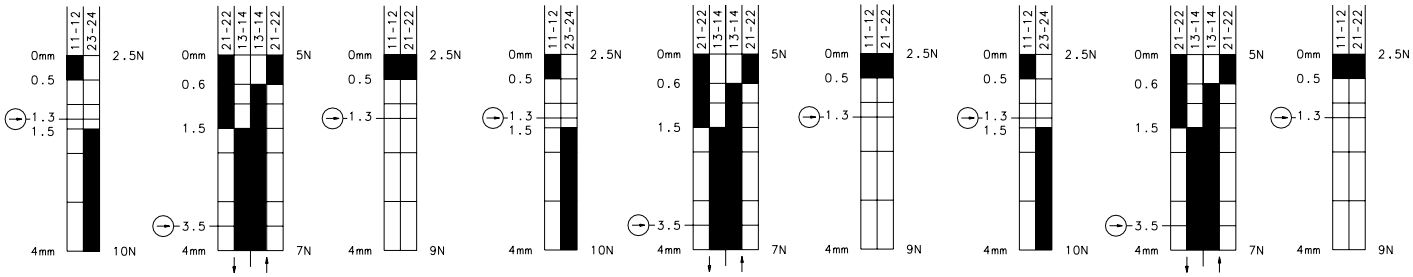

250 V AC	250 V AC	250 V AC	250 V AC	250 V AC	250 V AC	250 V AC	250 V AC	250 V AC
10 A	10 A	10 A	10 A	10 A	10 A	10 A	10 A	10 A
●	●	●	●	●	●	●	●	●
100/min.	100/min.	100/min.	100/min.	100/min.	100/min.	100/min.	100/min.	100/min.
3 x 10^6	3 x 10^6	3 x 10^6	3 x 10^6	3 x 10^6	3 x 10^6	3 x 10^6	3 x 10^6	3 x 10^6
–30 °C/+80 °C	–30 °C/+80 °C	–30 °C/+80 °C	–30 °C/+80 °C	–30 °C/+80 °C	–30 °C/+80 °C	–30 °C/+80 °C	–30 °C/+80 °C	–30 °C/+80 °C
–22 °F/+176 °F	–22 °F/+176 °F	–22 °F/+176 °F	–22 °F/+176 °F	–22 °F/+176 °F	–22 °F/+176 °F	–22 °F/+176 °F	–22 °F/+176 °F	–22 °F/+176 °F
UL, CSA	UL, CSA	UL, CSA	UL, CSA	UL, CSA	UL, CSA	UL, CSA	UL, CSA	UL, CSA
0.02 kg	0.02 kg	0.02 kg	0.02 kg	0.02 kg	0.02 kg	0.02 kg	0.02 kg	0.02 kg
●/–	●/–	●/–	●/–	●/–	●/–	●/–	●/–	●/–

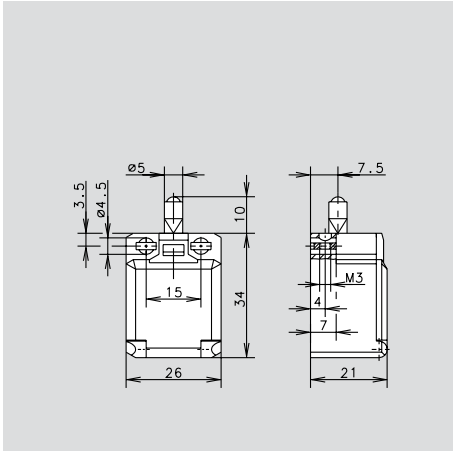

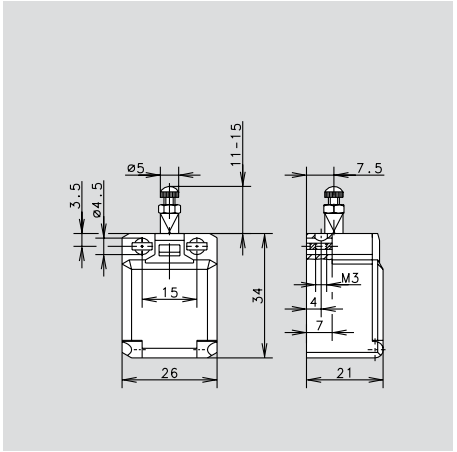

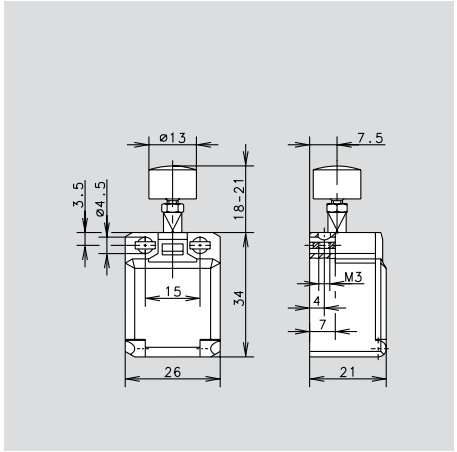





Designation	C2-U1Z R	C2-SU1Z R	C2-A2Z R	C2-U1Z o. M. + H	C2-SU1Z o. M. + H	C2-A2Z o. M. + H
Switch part number	**600.8116.013**	**600.8366.014**	**600.8816.015**	**600.8101.007**	**600.8351.008**	**600.8801.009**
Actuator part number	–	–	–	**391.0190.259**	**391.0190.259**	**391.0190.259**
Switching diagram	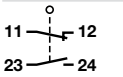	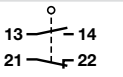	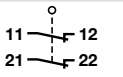	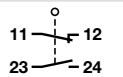	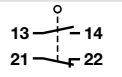	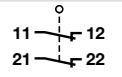
⊖ positive break according to IEC 947-5-1 Chap. 3						
Za: changeover contact is not galvanically isolated						
Zb: changeover contact is galvanically isolated						
Slow-action contact/snap-action contact	⊖ Zb	⊖ Zb	⊖ Zb	Zb	Zb	Zb
Gasket inside (iw)/outside (w)	●/–	–/●	●/–	●/–	–/●	●/–
	–/–	–/–	–/–	–/–	–/–	–/–

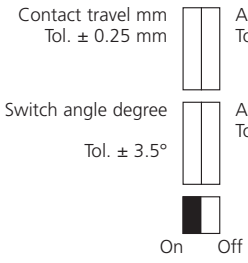

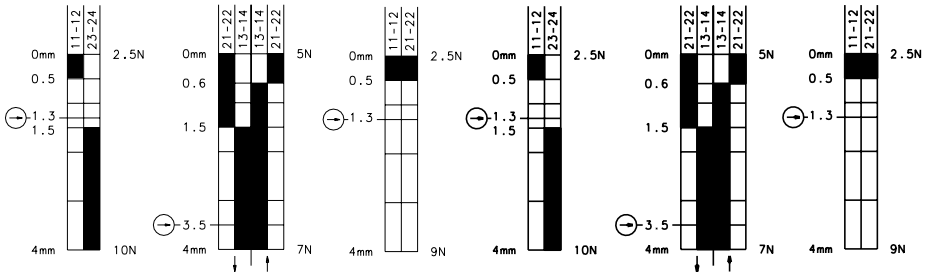

Voltage max.	250 V AC	250 V AC	250 V AC	250 V AC	250 V AC	250 V AC
Continuous current max.	10 A	10 A	10 A	10 A	10 A	10 A
Making current, acc. to IEC 947-5-1 AC 15/DC 13	●	●	●	●	●	●
Switching frequency max.	100/min.	100/min.	100/min.	100/min.	100/min.	100/min.
Mech. operational life – number of switching cycles	3 x 10^6	3 x 10^6	3 x 10^6	3 x 10^6	3 x 10^6	3 x 10^6
Ambient temperature min./max.	–30 °C/+80 °C	–30 °C/+80 °C	–30 °C/+80 °C	–30 °C/+80 °C	–30 °C/+80 °C	–30 °C/+80 °C
	–22 °F/+176 °F	–22 °F/+176 °F	–22 °F/+176 °F	–22 °F/+176 °F	–22 °F/+176 °F	–22 °F/+176 °F
Approvals	UL, CSA	UL, CSA	UL, CSA	UL, CSA	UL, CSA	UL, CSA
Weight	0.02 kg	0.02 kg	0.02 kg	0.03 kg	0.03 kg	0.03 kg
Delivery: ex-stock/built to order	●/–	●/–	●/–	●/–	●/–	●/–

Further switching functions

SA2

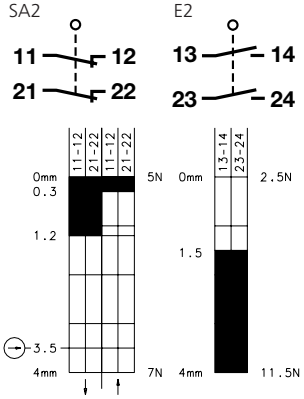

E2

SE2

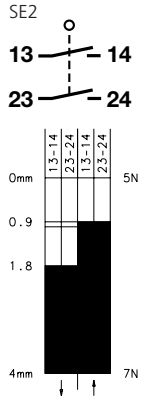

Dimensions

All dimensions in mm

