DT225 series

Desktop Trackball



DISTINCTIVE FEATURES

Non contacting optical encoders
Ergonomic and ambidextrous desktop design
2.25" diameter thermoset phenolic ball
USB 2.0 protocol
Stainless steel shaft and bearings



ENVIRONMENTAL SPECIFICATIONS

- Operating Temperature: -25 °C to +70 °C (-13 °F to +158 °F)
- Storage Temperature: -32 °C to +75 °C (-25.6 °F to +167 °F)
- FCC approved: Class B, subpart J of part 15

ELECTRICAL SPECIFICATIONS

- USB: Input: 4.75 V - 5.25 V @ 25 mA max;
  Output: USB 2.0

MECHANICAL SPECIFICATIONS

- Dimensions: 5.0" W x 5.5" D x 2.7" H
- Mechanical: 5,000,000 180°rotations with 6 ounces of vertical force
- Tracking force: 11 grams
- Mass/Weight: 460 g (16.23 oz)
- Ball diameter: 2.25" (57.15 mm)
- Ball rotation: 360°

MATERIALS

- Housing: High impact ABS
- Ball: Thermoset phenolic resin
- Shafts: Polished stainless steel
- Bearings: Encased stainless steel

The company reserves the right to change specifications without notice.

DT225 series

Desktop trackball

BUILD YOUR PART NUMBER

DT	225	___	X	___	V00	___
SERIES	MODEL	PROTOCOL FORMAT		RESOLUTION	POWER REQUIREMENT	COLOR

PROTOCOL FORMAT
- 7 USB 2.0

RESOLUTION
- 10 180 DPI
- 20 360 DPI
- 30 720 DPI

COLOR
- GRY Grey
- BLK Black

DIMENSIONS



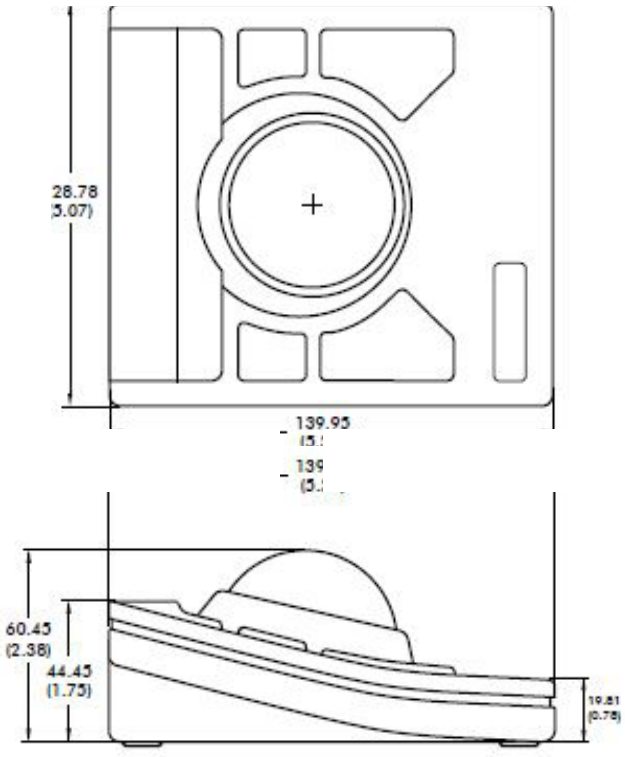

All dimensions are in mm /(inch).